2019 MULE™ 4010 TRANS4x4® CAMO

Kawasaki
Let the Good Times Roll®

PARTS DIAGRAM

Fuel Tank

F2410

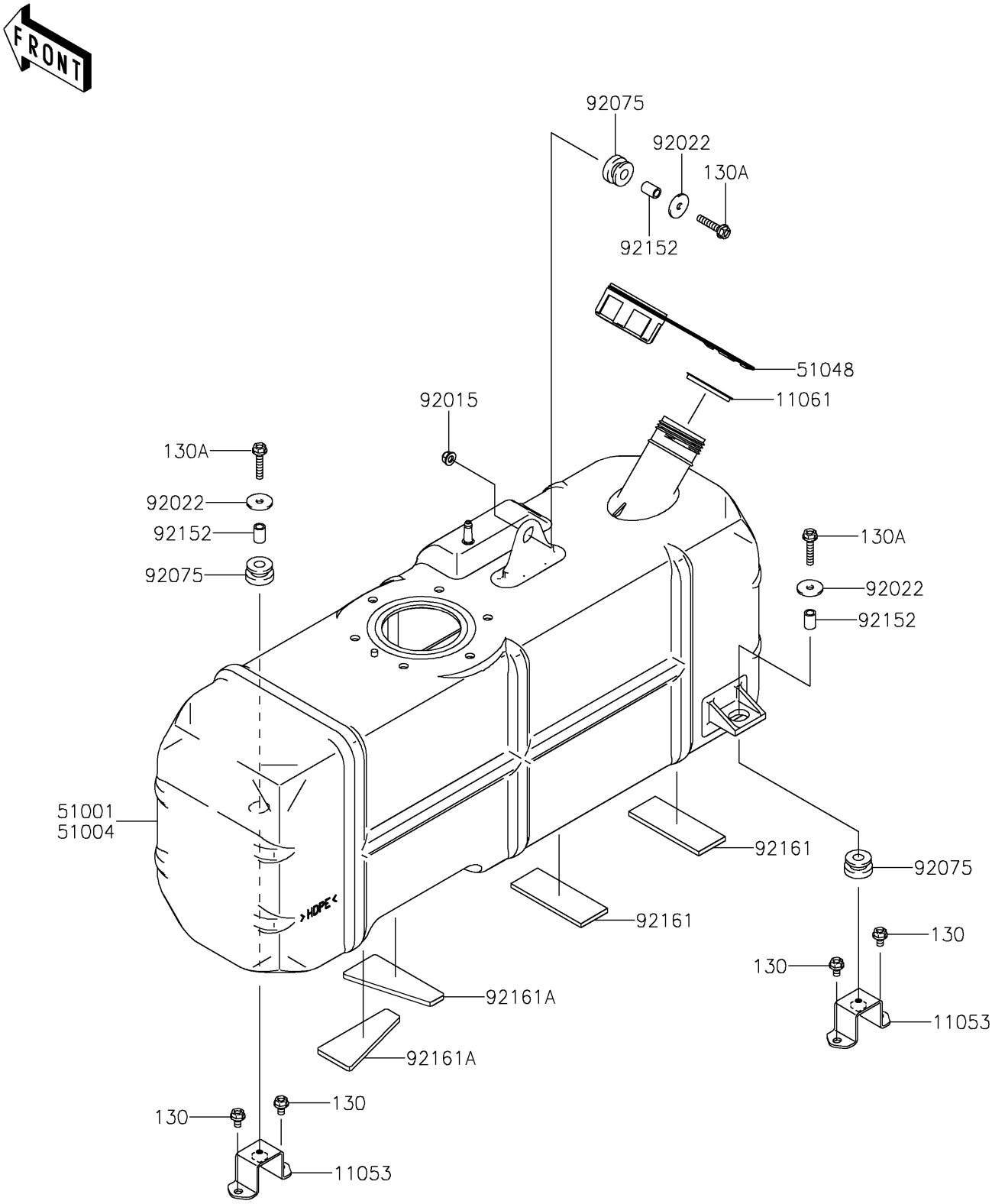

© 2026 Kawasaki Motors Corp., U.S.A.

2019 MULE™ 4010 TRANS4x4® CAMO

Kawasaki
Let the Good Times Roll®

PARTS LIST

Fuel Tank

ITEM NAME	PART NUMBER	QUANTITY

© 2026 Kawasaki Motors Corp., U.S.A.