2019 MULE™ 4000

PARTS DIAGRAM

Steering Wheel

F2311

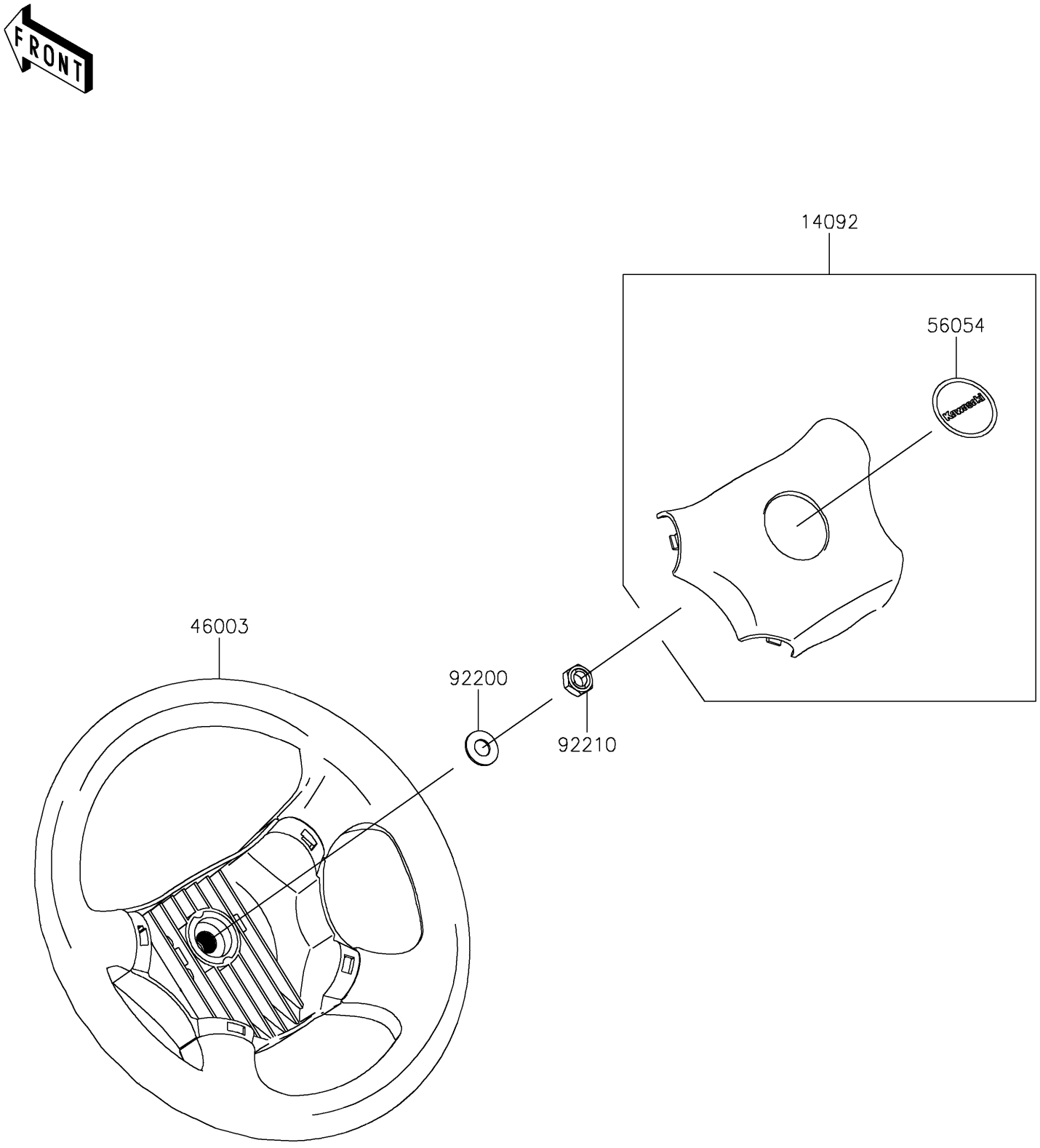

© 2026 Kawasaki Motors Corp., U.S.A.

2019 MULE™ 4000

PARTS LIST

Steering Wheel

ITEM NAME	PART NUMBER	QUANTITY

© 2026 Kawasaki Motors Corp., U.S.A.