# 2019 MULE™ 4000

## PARTS DIAGRAM

### Valve(s)/Camshaft(s)

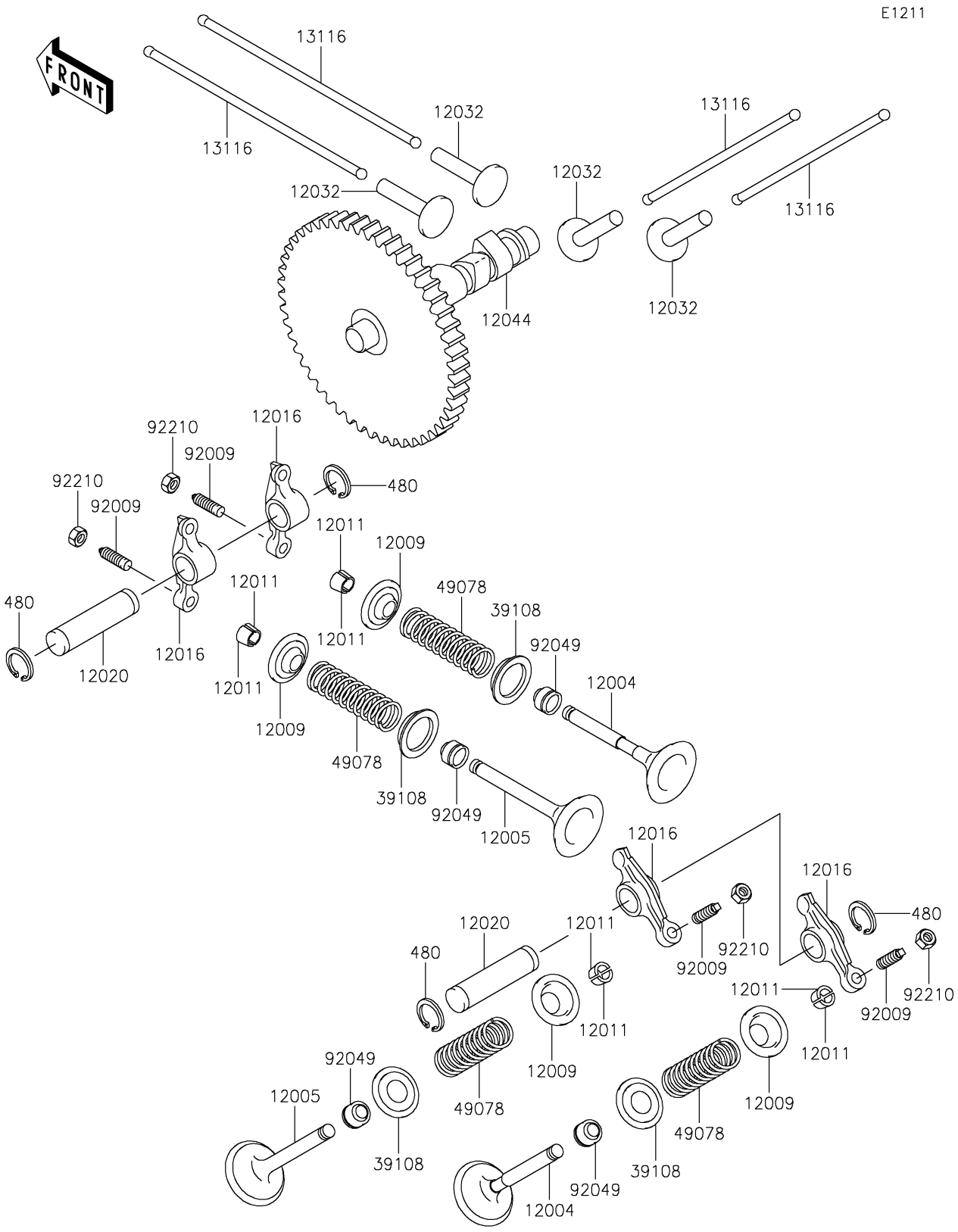


© 2026 Kawasaki Motors Corp., U.S.A.

# 2019 MULE™ 4000

## PARTS LIST

Valve(s)/Camshaft(s)

| ITEM NAME | PART NUMBER | QUANTITY |
|---|---|---|

© 2026 Kawasaki Motors Corp., U.S.A.