1994 ZR1100 Zephyr

PARTS DIAGRAM

Chassis Electrical Equipment

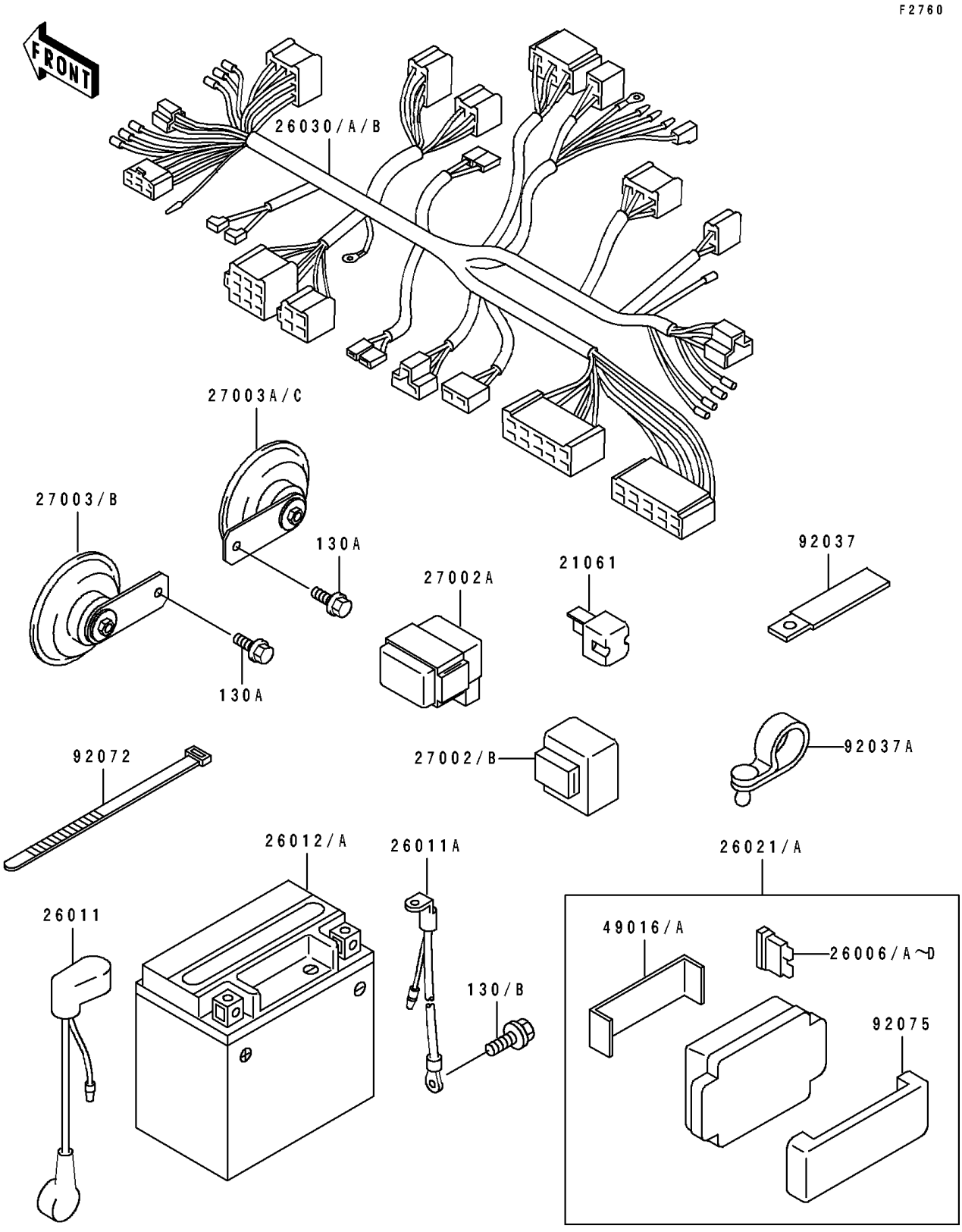

© 2026 Kawasaki Motors Corp., U.S.A.

1994 ZR1100 Zephyr

PARTS LIST

Chassis Electrical Equipment

ITEM NAME	PART NUMBER	QUANTITY
RECTIFIER (Ref # 21061)	21061-1003	1
FUSE,30A-G (Ref # 26006)	26006-1006	2
FUSE,10A-R (Ref # 26006A)	26006-1007	6
WIRE-LEAD,BATTERY(+) (Ref # 26011)	26011-1531	1
WIRE-LEAD,BATTERY(-) (Ref # 26011A)	26011-1532	1
BATTERY,FTH16-BS,12V 14AH (Ref # 26012A)	26012-1296	1
JUNCTION BOX (Ref # 26021)	26021-1079	1
HARNESS,MAIN (Ref # 26030A)	26030-1240	1
RELAY-ASSY,TURN SIGNAL (Ref # 27002)	27002-1060	1
RELAY-ASSY,HEAD LAMP (Ref # 27002A)	27002-1078	1
HORN,LH (Ref # 27003)	27003-1360	1
HORN,RH (Ref # 27003A)	27003-1361	1
COVER-SEAL,FUSE (Ref # 49016)	49016-1106	1
CLAMP,WIRING HARNESS (Ref # 92037)	92037-1069	2
CLAMP (Ref # 92037A)	92037-1290	2
BAND,L=185 (Ref # 92072)	92072-1195	5
DAMPER,JUNCTION BOX (Ref # 92075)	92075-1688	1
BOLT-FLANGED,6X10 (Ref # 130)	130G0610	1
BOLT-FLANGED (Ref # 130A)	130J0812	2

© 2026 Kawasaki Motors Corp., U.S.A.