2020 MULE 4000 TRANS™

PARTS DIAGRAM

Valve(s)/Camshaft(s)

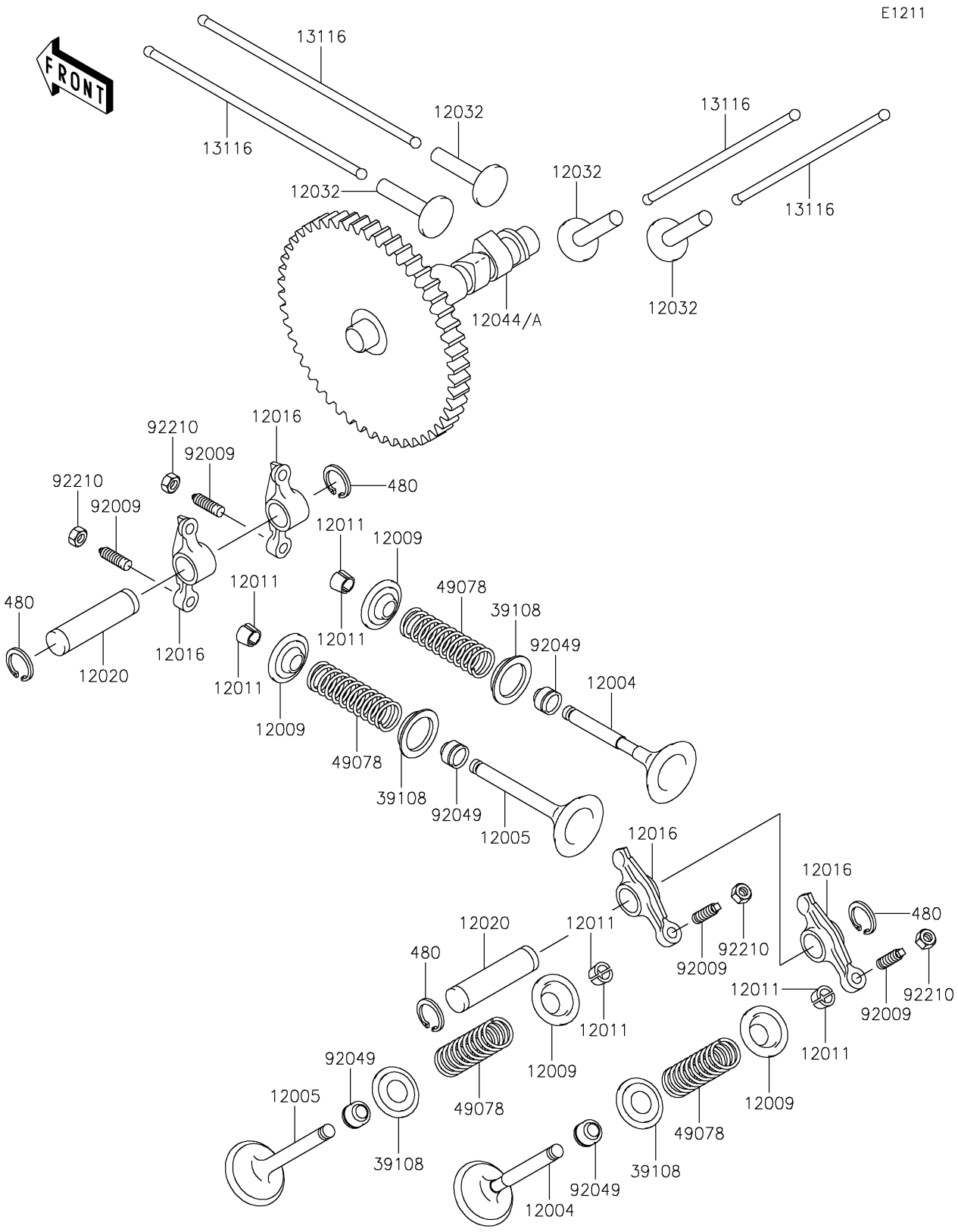

© 2026 Kawasaki Motors Corp., U.S.A.

2020 MULE 4000 TRANS™

PARTS LIST

Valve(s)/Camshaft(s)

ITEM NAME	PART NUMBER	QUANTITY
VALVE-INTAKE (Ref # 12004)	12004-2115	2
VALVE-EXHAUST (Ref # 12005)	12005-2093	2
RETAINER-VALVE SPRING (Ref # 12009)	12009-2067	4
COLLET (Ref # 12011)	12011-2056	8
ARM-ROCKER (Ref # 12016)	12016-2056	4
SHAFT-ROCKER (Ref # 12020)	12020-2059	2
TAPPET (Ref # 12032)	12032-2064	4
CAMSHAFT-VALVE (Ref # 12044A)	12044-0956	1
ROD-PUSH (Ref # 13116)	13116-2057	4
RETAINER-SPRING (Ref # 39108)	39108-2057	4
SPRING-ENGINE VALVE (Ref # 49078)	49078-2082	4
SCREW,VALVE ADJUST (Ref # 92009)	92009-1109	4
SEAL-OIL (Ref # 92049)	92049-2109	4
NUT,VALVE ADJUST LOCK (Ref # 92210)	92210-1491	4
CIRCLIP-TYPE-C,12MM (Ref # 480)	480J1200	4

© 2026 Kawasaki Motors Corp., U.S.A.