1994 ZR1100 Zephyr

PARTS DIAGRAM

Frame Fittings

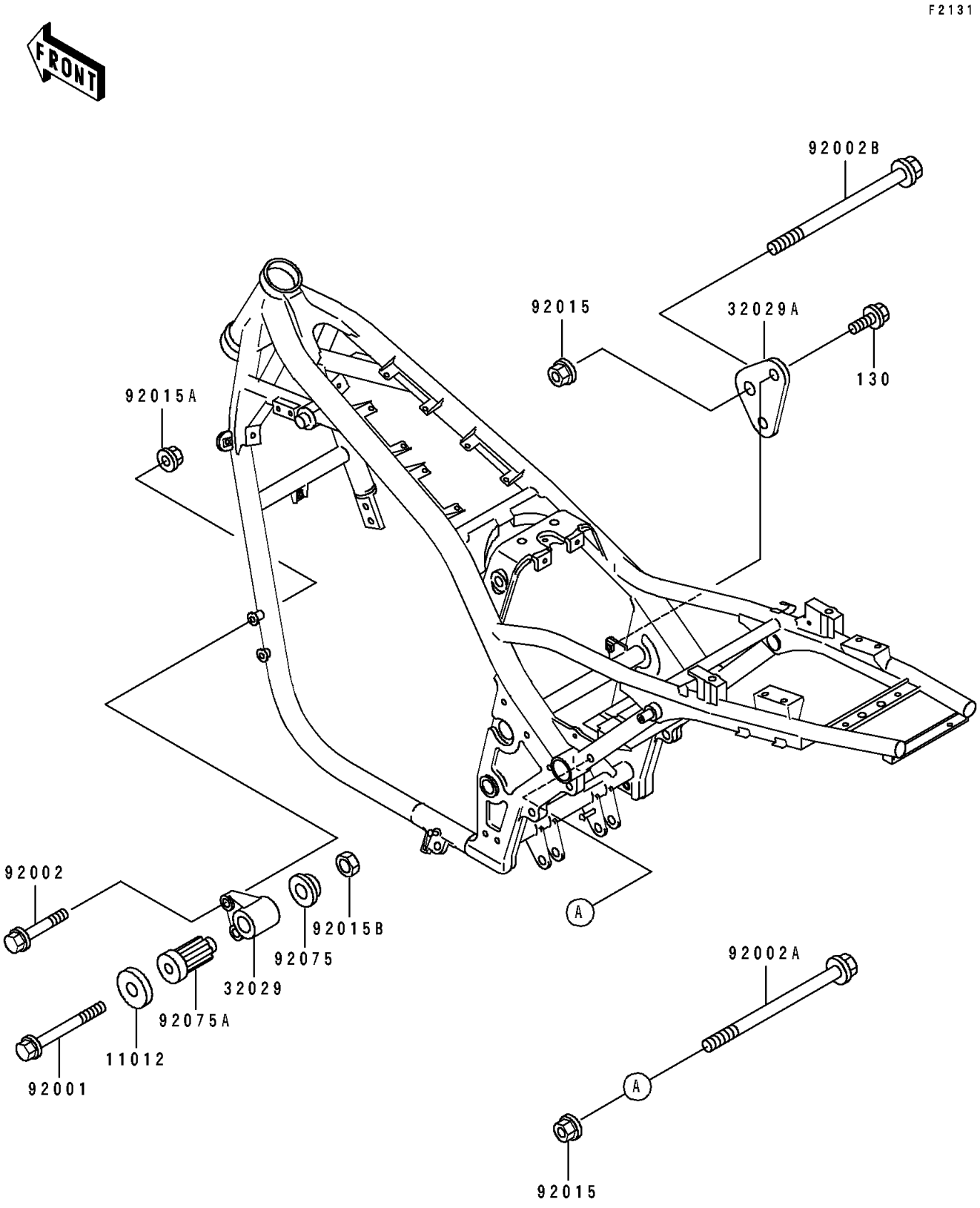

© 2026 Kawasaki Motors Corp., U.S.A.

1994 ZR1100 Zephyr

PARTS LIST

Frame Fittings

ITEM NAME	PART NUMBER	QUANTITY

© 2026 Kawasaki Motors Corp., U.S.A.