1994 ZR1100 Zephyr

PARTS DIAGRAM

Carburetor Parts

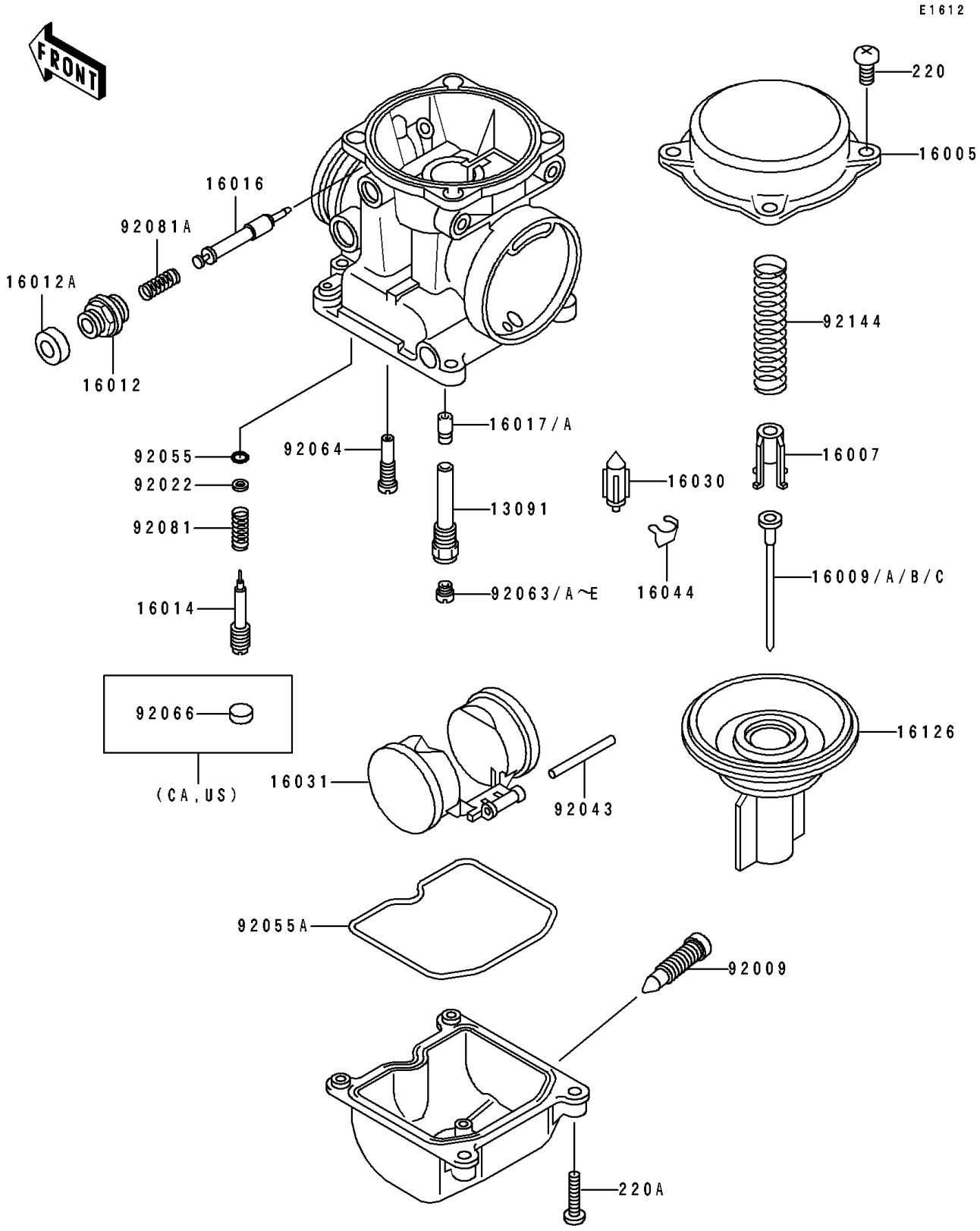

© 2026 Kawasaki Motors Corp., U.S.A.

1994 ZR1100 Zephyr

PARTS LIST

Carburetor Parts

ITEM NAME	PART NUMBER	QUANTITY

© 2026 Kawasaki Motors Corp., U.S.A.