2022 KX™250X

PARTS DIAGRAM

Chassis Electrical Equipment

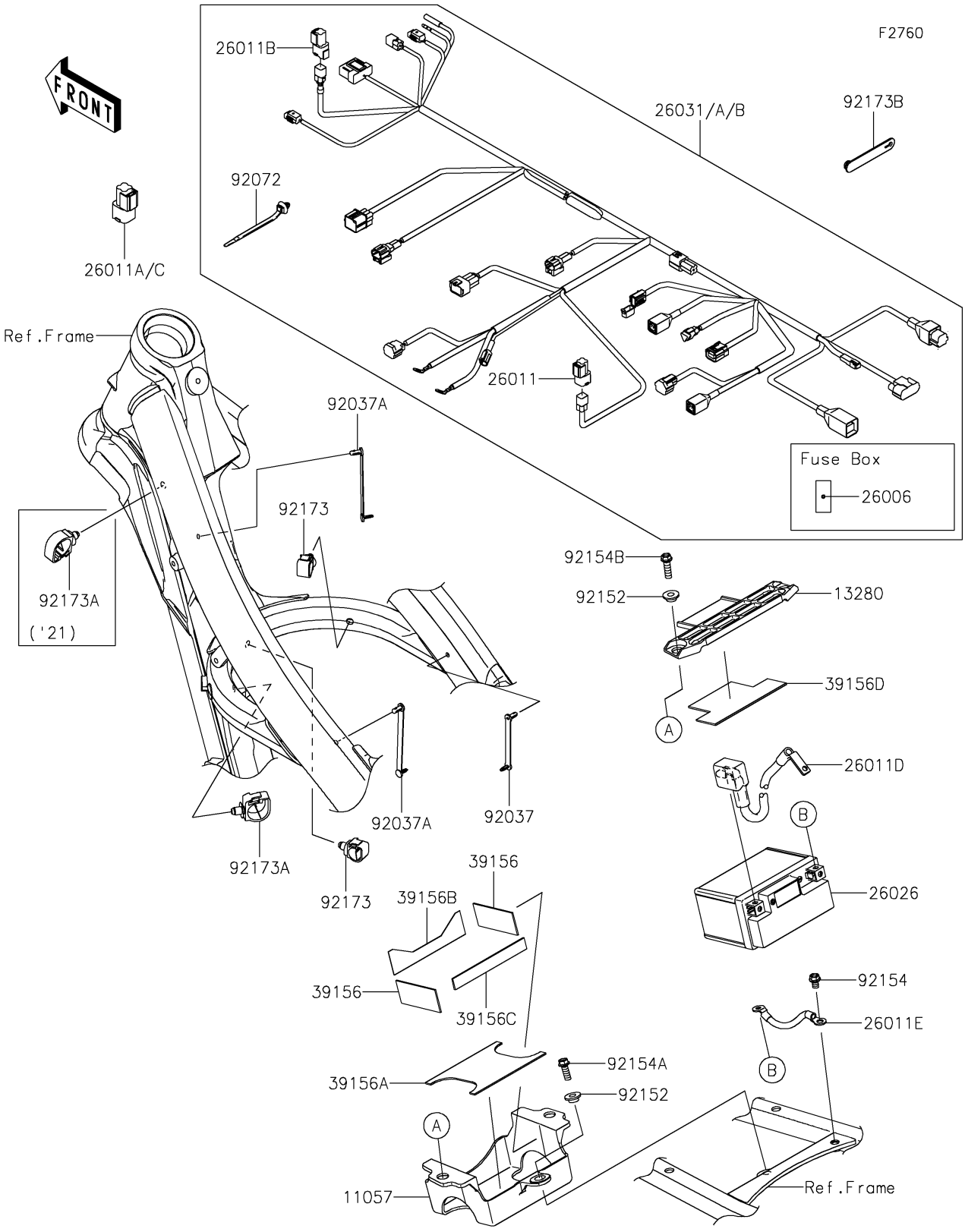

© 2026 Kawasaki Motors Corp., U.S.A.

2022 KX™250X

PARTS LIST

Chassis Electrical Equipment

Kawasaki
Let the Good Times Roll®

ITEM NAME	PART NUMBER	QUANTITY
BRACKET,BATTERY CASE (Ref # 11057)	11057-1550	1
HOLDER,BATTERY COVER (Ref # 13280)	13280-0912	1
FUSE,MINI BLADE,5A,TAN (Ref # 26006)	26006-1077	1
WIRE-LEAD,NATURAL (Ref # 26011)	26011-0273	1
WIRE-LEAD,GREEN (Ref # 26011A)	26011-0727	1
WIRE-LEAD,MODE SELECT,BLACK (Ref # 26011B)	26011-0728	1
WIRE-LEAD,MODE SELECT,WHITE (Ref # 26011C)	26011-0748	1
WIRE-LEAD,BATTERY(+) (Ref # 26011D)	26011-0996	1
WIRE-LEAD,BATTERY(-) (Ref # 26011E)	26011-0997	1
BATTERY-LI-ION-STARTER,HJ01 (Ref # 26026)	26026-0003	1
HARNESS,MAIN (Ref # 26031)	26031-2981	1
PAD,25X58X1.5 (Ref # 39156)	39156-2419	2
PAD,100X72X1.5 (Ref # 39156A)	39156-2420	1
PAD,FR (Ref # 39156B)	39156-2640	1
PAD,RR (Ref # 39156C)	39156-2641	1
PAD,TOP (Ref # 39156D)	39156-2642	1
CLAMP,SPEED,L=58 (Ref # 92037)	92037-1163	1
CLAMP,SPEED,L=80.5 (Ref # 92037A)	92037-1903	2
BAND,OS170-FT7(BLACK) (Ref # 92072)	92072-1414	AR
COLLAR,6.5X10X5.6 (Ref # 92152)	92152-0445	3
BOLT,FLANGED,6X8 (Ref # 92154)	92154-2962	1
BOLT,FLANGED,6X16 (Ref # 92154A)	92154-2965	1
BOLT,FLANGED,6X20 (Ref # 92154B)	92154-2966	2
CLAMP,12MM DIA. (Ref # 92173)	92173-0736	2
CLAMP (Ref # 92173A)	92173-0861	1
CLAMP (Ref # 92173B)	92173-1526	1

© 2026 Kawasaki Motors Corp., U.S.A.