2022 KX™250X

PARTS DIAGRAM

Clutch Master Cylinder

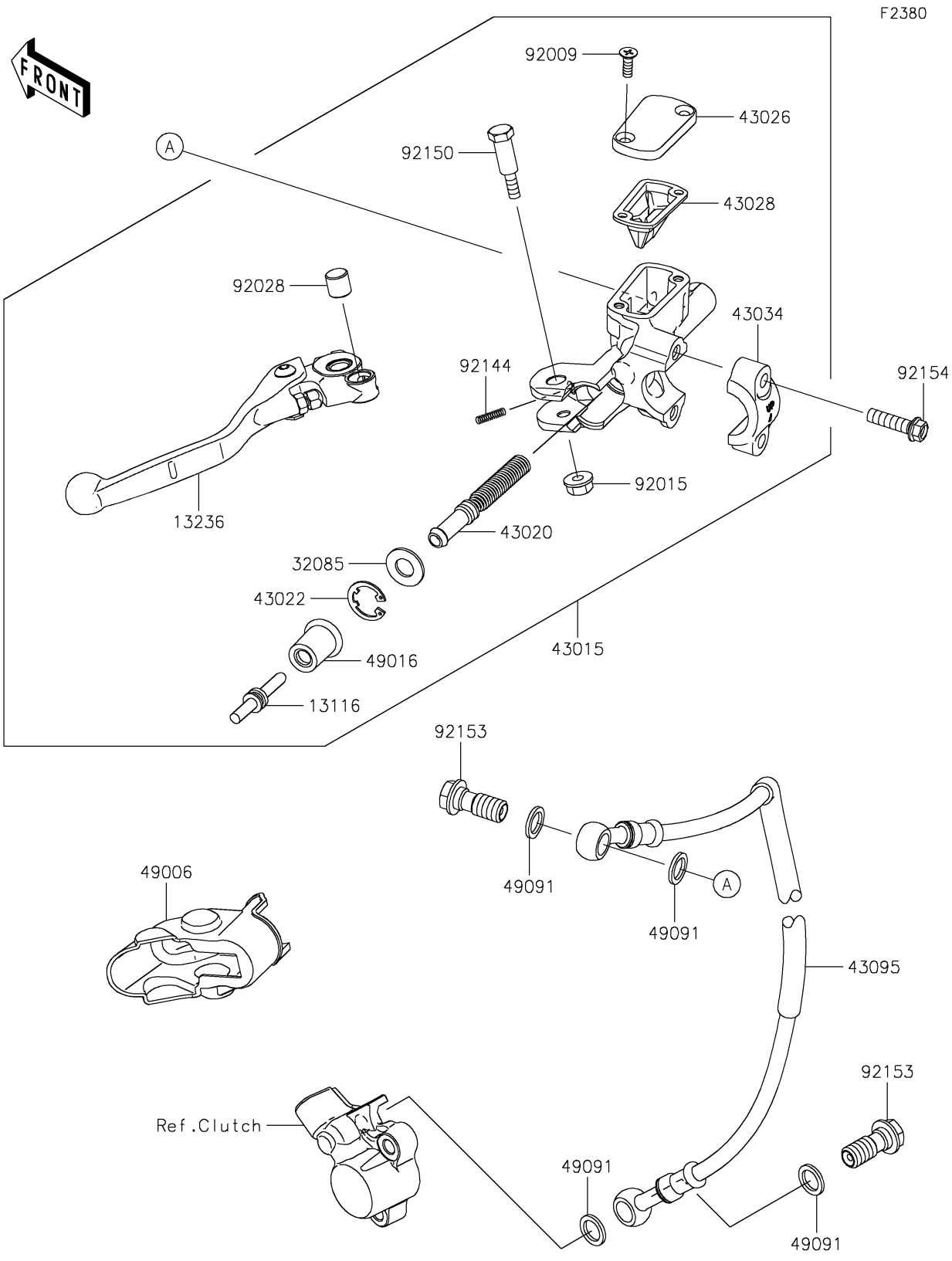

© 2026 Kawasaki Motors Corp., U.S.A.

2022 KX™250X

PARTS LIST

Clutch Master Cylinder

ITEM NAME	PART NUMBER	QUANTITY
ROD-PUSH (Ref # 13116)	13116-0743	1
LEVER-COMP (Ref # 13236)	13236-0813	1
STOPPER (Ref # 32085)	32085-1508	1
CYLINDER-ASSY-MASTER,CLUTCH (Ref # 43015)	43015-0742	1
PISTON-COMP-BRAKE (Ref # 43020)	43020-0030	1
STOPPER-BRAKE,PISTON (Ref # 43022)	43022-1010	1
CAP-BRAKE (Ref # 43026)	43026-0030	1
DIAPHRAGM (Ref # 43028)	43028-1092	1
HOLDER-BRAKE (Ref # 43034)	43034-1110	1
HOSE-BRAKE,CLUTCH,1116MM (Ref # 43095)	43095-1542	1
BOOT,CLUTCH M/CYL. (Ref # 49006)	49006-0605	1
COVER-SEAL (Ref # 49016)	49016-0663	1
WASHER-SEAL,10.1X14.5X1.5 (Ref # 49091)	49091-0001	4
SCREW (Ref # 92009)	92009-1795	2
NUT,FLANGED,6MM (Ref # 92015)	92015-1528	1
BUSHING,MASTER CYLINDER (Ref # 92028)	92028-1310	1
SPRING,RETURN (Ref # 92144)	92144-1725	1
BOLT,LEVER SET (Ref # 92150)	92150-1451	1
BOLT,OIL,L=23 (Ref # 92153)	92153-1419	2
BOLT,6X22 (Ref # 92154)	92154-3780	2

© 2026 Kawasaki Motors Corp., U.S.A.