2022 KX™250X

PARTS DIAGRAM

Footrests(DMFNN/DNFNN)

F2160

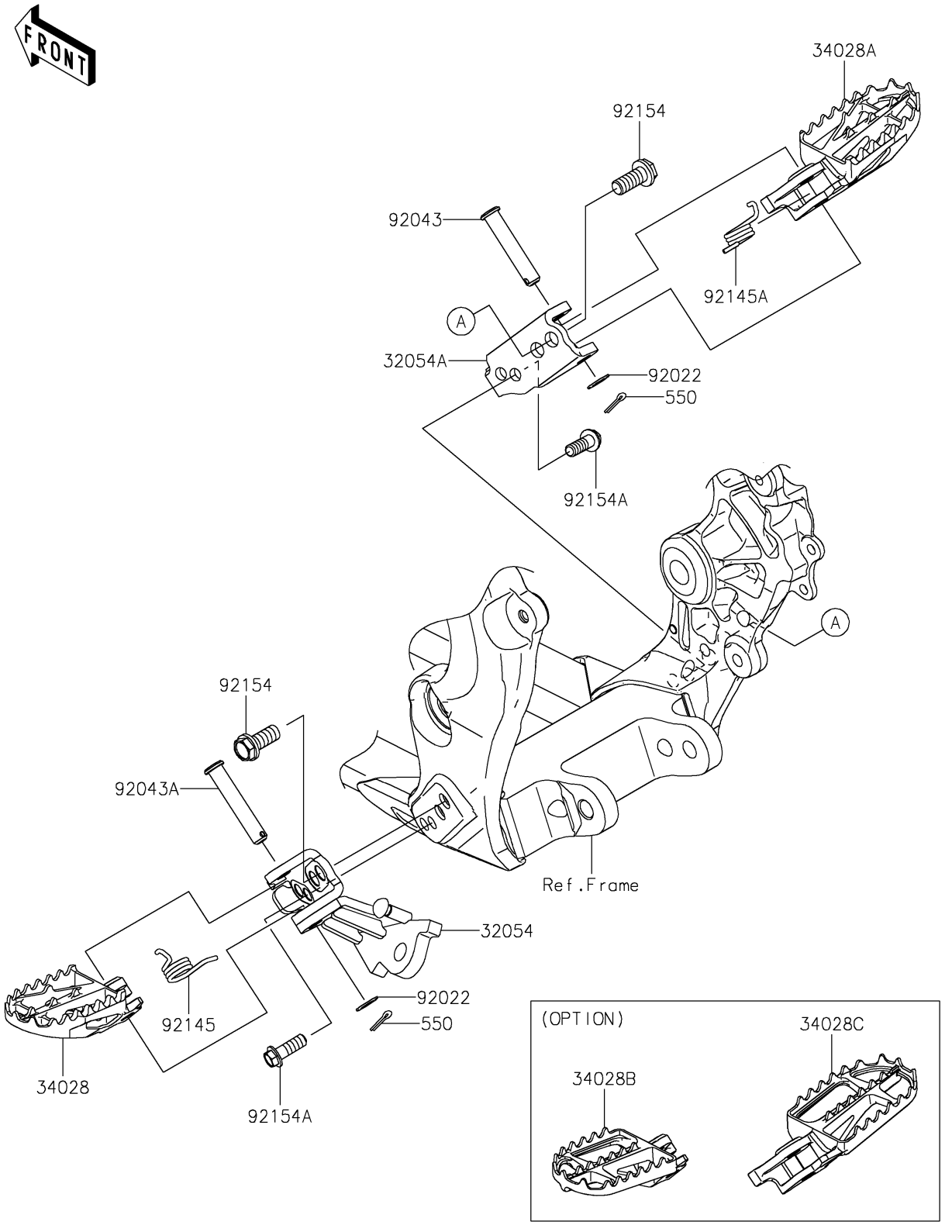

© 2026 Kawasaki Motors Corp., U.S.A.

2022 KX™250X

PARTS LIST

Footrests(DMFNN/DNFNN)

Kawasaki
Let the Good Times Roll®

ITEM NAME	PART NUMBER	QUANTITY
BRACKET-STEP,LH (Ref # 32054)	32054-0094	1
BRACKET-STEP,RH (Ref # 32054A)	32054-0096	1
STEP,LH (Ref # 34028)	34028-0104	1
STEP,RH (Ref # 34028A)	34028-0105	1
STEP,WIDE,LH (Ref # 34028B)	34028-0360	1
STEP,WIDE,RH (Ref # 34028C)	34028-0361	1
WASHER,10.2X16X1 (Ref # 92022)	92022-1829	2
PIN,10X42.5 (Ref # 92043)	92043-0074	1
PIN,10X53 (Ref # 92043A)	92043-1743	1
SPRING,STEP,LH (Ref # 92145)	92145-0819	1
SPRING,STEP,RH (Ref # 92145A)	92145-0820	1
BOLT,FLANGED,10X23 (Ref # 92154)	92154-0545	2
BOLT,8X23,MEC (Ref # 92154A)	92154-2987	2
PIN-COTTER,3.0X20 (Ref # 550)	550S3020	2

© 2026 Kawasaki Motors Corp., U.S.A.