# 2022 KX™250X

## PARTS DIAGRAM

### Crankshaft

E1321

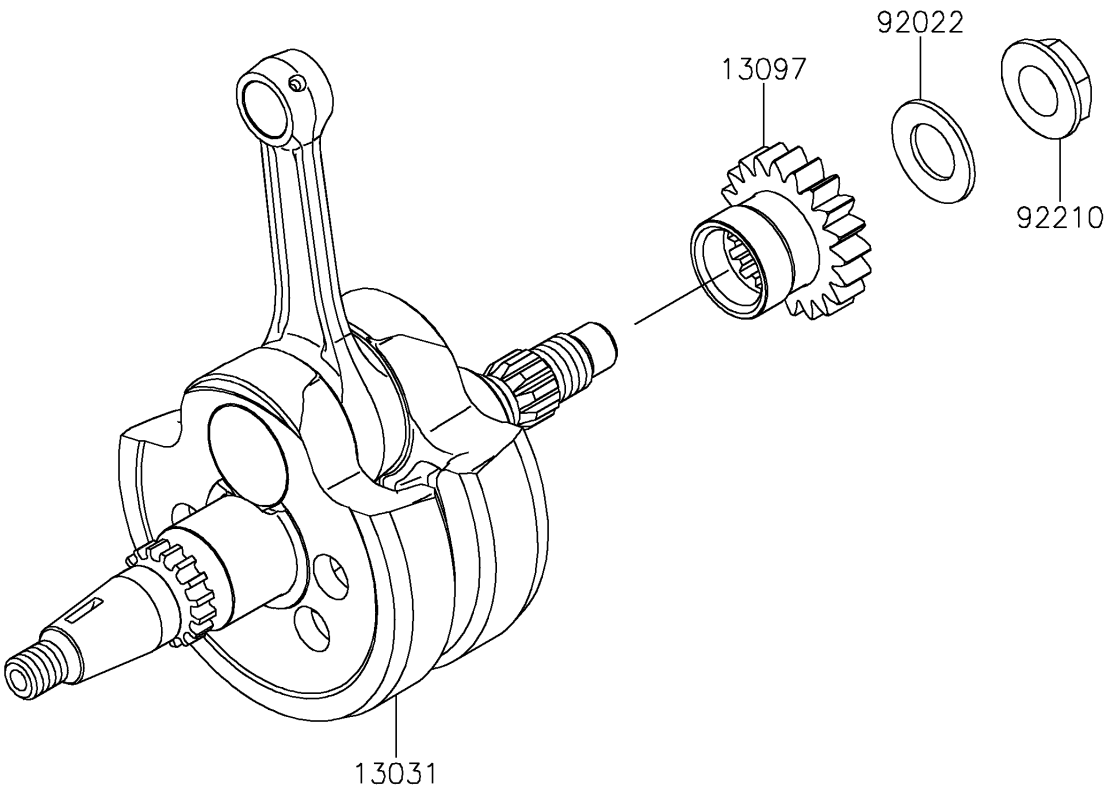


© 2026 Kawasaki Motors Corp., U.S.A.

# 2022 KX™250X

## PARTS LIST

### Crankshaft

| ITEM NAME | PART NUMBER | QUANTITY |
|---|---|---|
| CRANKSHAFT-COMP (Ref # 13031) | 13031-1539 | 1 |
| GEAR-PRIMARY SPUR,20T (Ref # 13097) | 13097-0617 | 1 |
| WASHER,16.3X29X1.75 (Ref # 92022) | 92022-1356 | 1 |
| NUT,LEFT HANDED,16MM (Ref # 92210) | 92210-0350 | 1 |

© 2026 Kawasaki Motors Corp., U.S.A.