2009 Z1000 (European)

PARTS DIAGRAM

Clutch

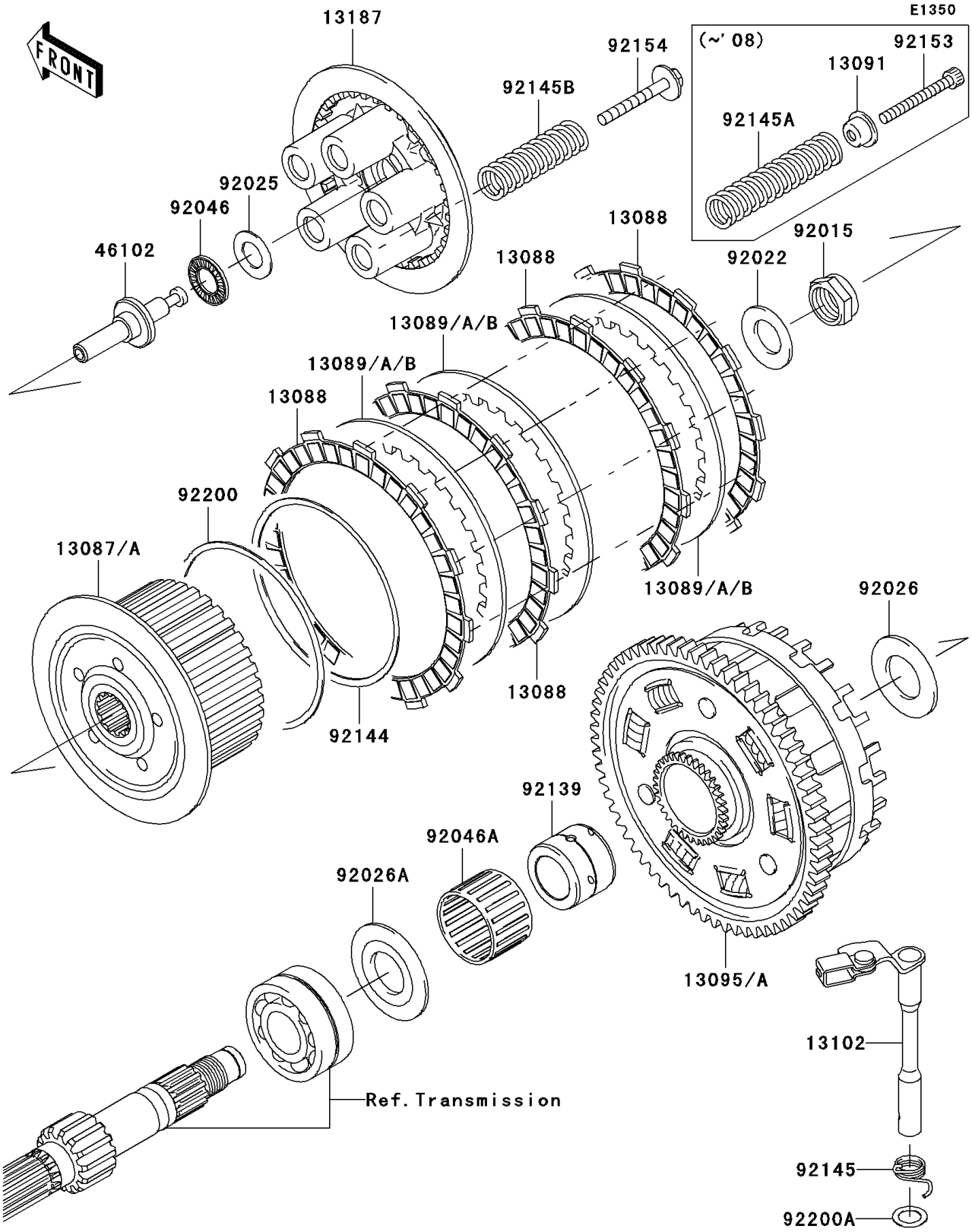

© 2026 Kawasaki Motors Corp., U.S.A.

2009 Z1000 (European)

PARTS LIST

Clutch

ITEM NAME	PART NUMBER	QUANTITY
HUB-CLUTCH (Ref # 13087)	13087-0050	1
PLATE-FRICTION (Ref # 13088)	13088-1124	10
PLATE-CLUTCH,T=2.0 (Ref # 13089)	13089-1073	AR
PLATE-CLUTCH,T=2.3 (Ref # 13089A)	13089-1084	9
PLATE-CLUTCH,T=2.6 (Ref # 13089B)	13089-1115	AR
HOUSING-COMP-CLUTCH (Ref # 13095A)	13095-0109	1
RELEASE-COMP-CLUTCH (Ref # 13102)	13102-1162	1
PLATE-CLUTCH OPERATING (Ref # 13187)	13187-1083	1
ROD (Ref # 46102)	46102-0083	1
NUT,20MM (Ref # 92015)	92015-1555	1
WASHER,20.3X36X3.7 (Ref # 92022)	92022-1868	1
SHIM,15.3X27.5X1.20 (Ref # 92025)	92025-1137	1
SPACER,25.5X47X2.5 (Ref # 92026)	92026-022	1
SPACER (Ref # 92026A)	92026-1497	1
BEARING-NEEDLE,AXK1102 (Ref # 92046)	92046-1052	1
BEARING-NEEDLE,K38X43X28.8X (Ref # 92046A)	92046-1263	1
BUSHING,25X38X29.05 (Ref # 92139)	92139-0067	1
SPRING,FRICTION PLATE (Ref # 92144)	92144-1854	1
SPRING,CLUTCH RELEASE (Ref # 92145)	92145-0066	1
SPRING,CLUTCH (Ref # 92145B)	92145-0691	5
BOLT,6X50 (Ref # 92154)	92154-0176	5
WASHER,FRICTION PLATE (Ref # 92200)	92200-1260	1
WASHER,12X18.5X0.5 (Ref # 92200A)	92200-1487	1

© 2026 Kawasaki Motors Corp., U.S.A.