2024 Ninja 400 ABS

PARTS DIAGRAM

Engine Mount

F2122

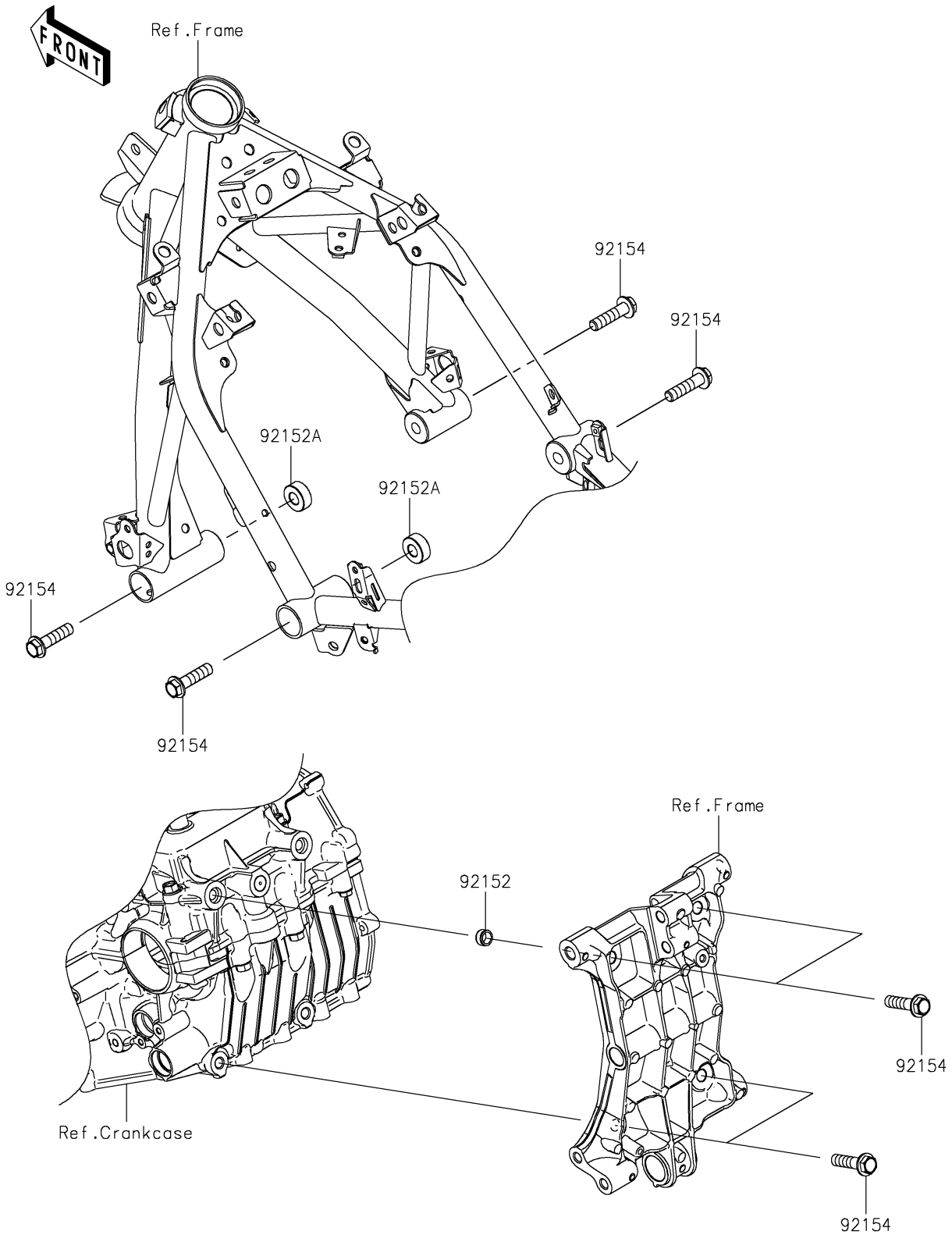

© 2026 Kawasaki Motors Corp., U.S.A.

2024 Ninja 400 ABS

PARTS LIST

Engine Mount

ITEM NAME	PART NUMBER	QUANTITY
COLLAR,DOWEL PIN (Ref # 92152)	92152-0679	2
COLLAR,11X25X10 (Ref # 92152A)	92152-2397	2
BOLT,FLANGED,10X40 (Ref # 92154)	92154-2812	8

© 2026 Kawasaki Motors Corp., U.S.A.