2024 Ninja 400 KRT Edition ABS

PARTS DIAGRAM

Crankcase Bolt Pattern

E1412

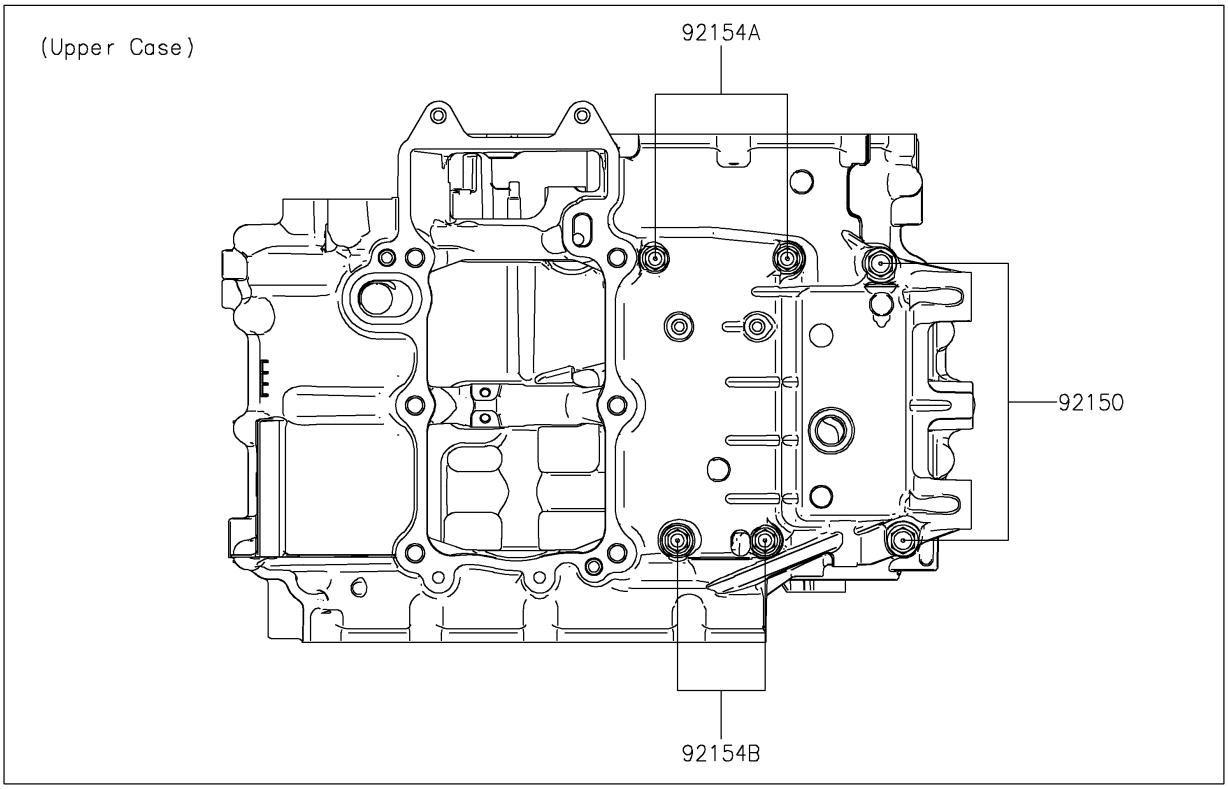

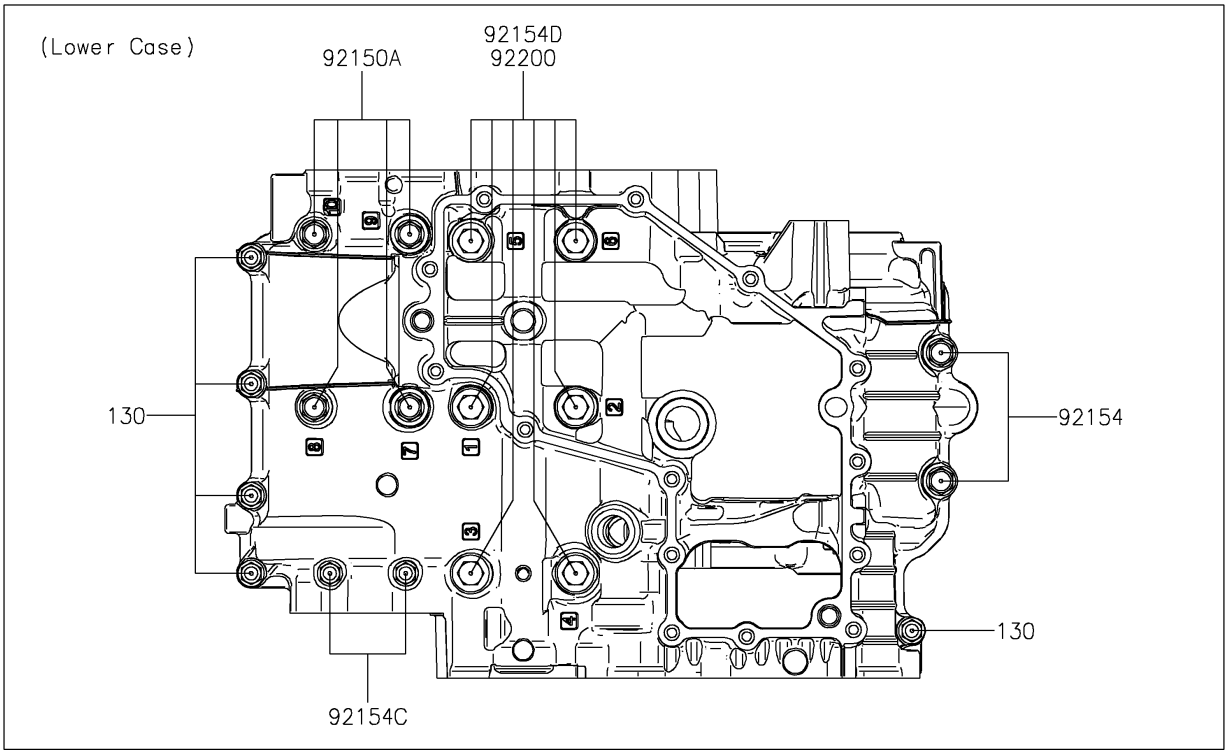

© 2026 Kawasaki Motors Corp., U.S.A.

2024 Ninja 400 KRT Edition ABS

PARTS LIST

Crankcase Bolt Pattern

ITEM NAME	PART NUMBER	QUANTITY
BOLT,8X80 (Ref # 92150)	92150-1162	2
BOLT,8X70 (Ref # 92150A)	92150-1483	4
BOLT,FLANGED,8X40 (Ref # 92154)	92154-0992	2
BOLT,FLANGED,6X72 (Ref # 92154A)	92154-2679	2
BOLT,FLANGED,6X52 (Ref # 92154B)	92154-2680	2
BOLT,FLANGED,6X76 (Ref # 92154C)	92154-2681	2
BOLT,FLANGED,9X105 (Ref # 92154D)	92154-7020	6
WASHER,9.2X19X2.3 (Ref # 92200)	92200-0115	6
BOLT-FLANGED,6X30 (Ref # 130)	130CA0630	5

© 2026 Kawasaki Motors Corp., U.S.A.