2022 VERSYS® 650

PARTS DIAGRAM

Accessory(LED Lamp)

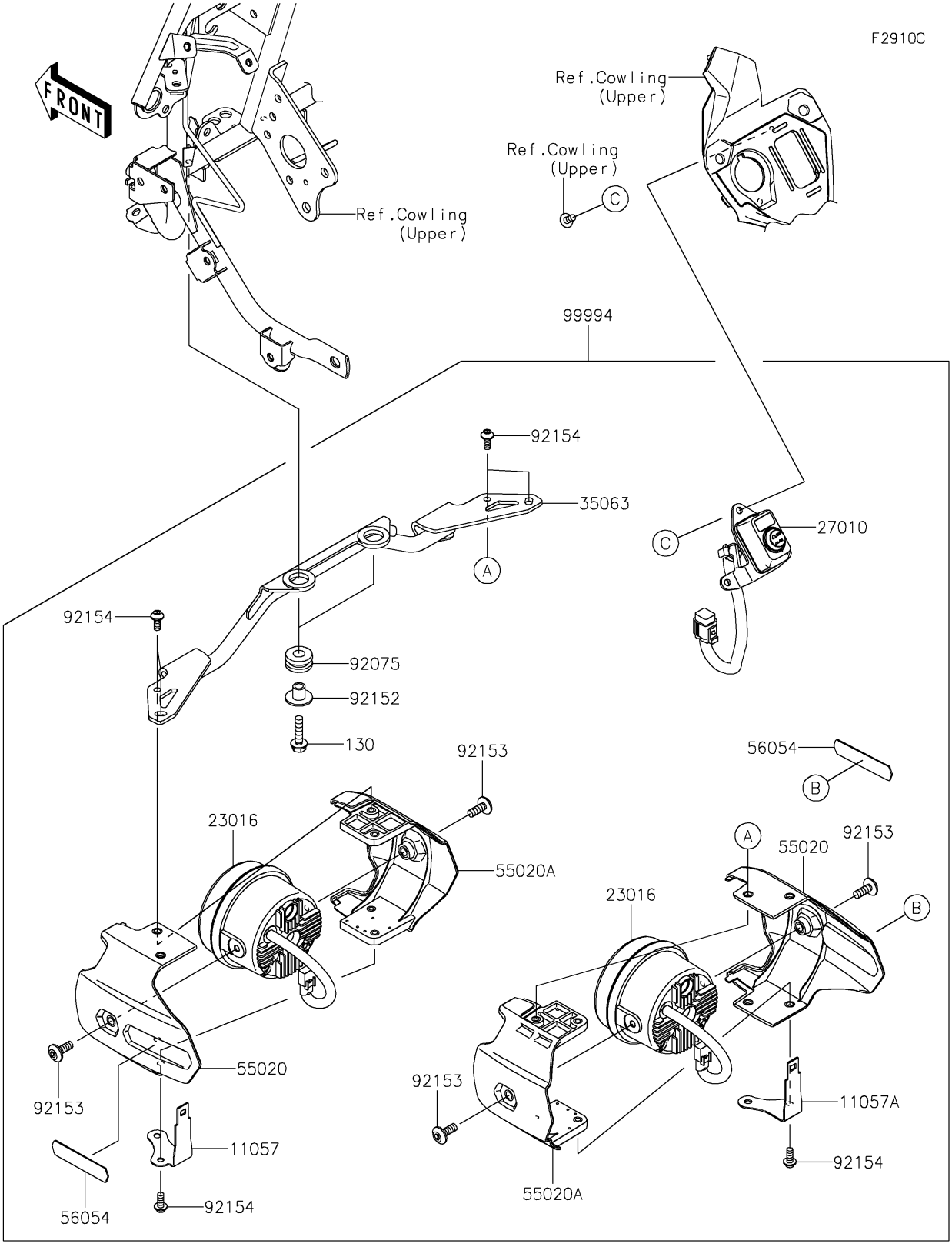

© 2026 Kawasaki Motors Corp., U.S.A.

2022 VERSYS® 650

PARTS LIST

Accessory(LED Lamp)

ITEM NAME	PART NUMBER	QUANTITY
BRACKET,LH (Ref # 11057)	11057-7532	1
BRACKET,RH (Ref # 11057A)	11057-7533	1
LAMP-ASSY,LED,FOG,PIAA (Ref # 23016)	23016-0599	2
SWITCH,FOG LAMP (Ref # 27010)	27010-0968	1
STAY (Ref # 35063)	35063-1582	1
GUARD,OUTER (Ref # 55020)	55020-1825	2
GUARD,INNER (Ref # 55020A)	55020-1826	2
MARK,FOG LAMP,KAWASAKI (Ref # 56054)	56054-1695	2
DAMPER,CASE (Ref # 92075)	92075-222	2
COLLAR,6.8X10X12.1 (Ref # 92152)	92152-1407	2
BOLT,SOCKET,6X16 (Ref # 92153)	92153-1526	4
BOLT,SOCKET,5X12 (Ref # 92154)	92154-0917	8
LED LAMP (Ref # 99994)	99994-1687	1
BOLT-FLANGED,6X25 (Ref # 130)	130BB0625	2

© 2026 Kawasaki Motors Corp., U.S.A.