2022 VERSYS® 650

PARTS DIAGRAM

Front Master Cylinder

Kawasaki
Let the Good Times Roll®

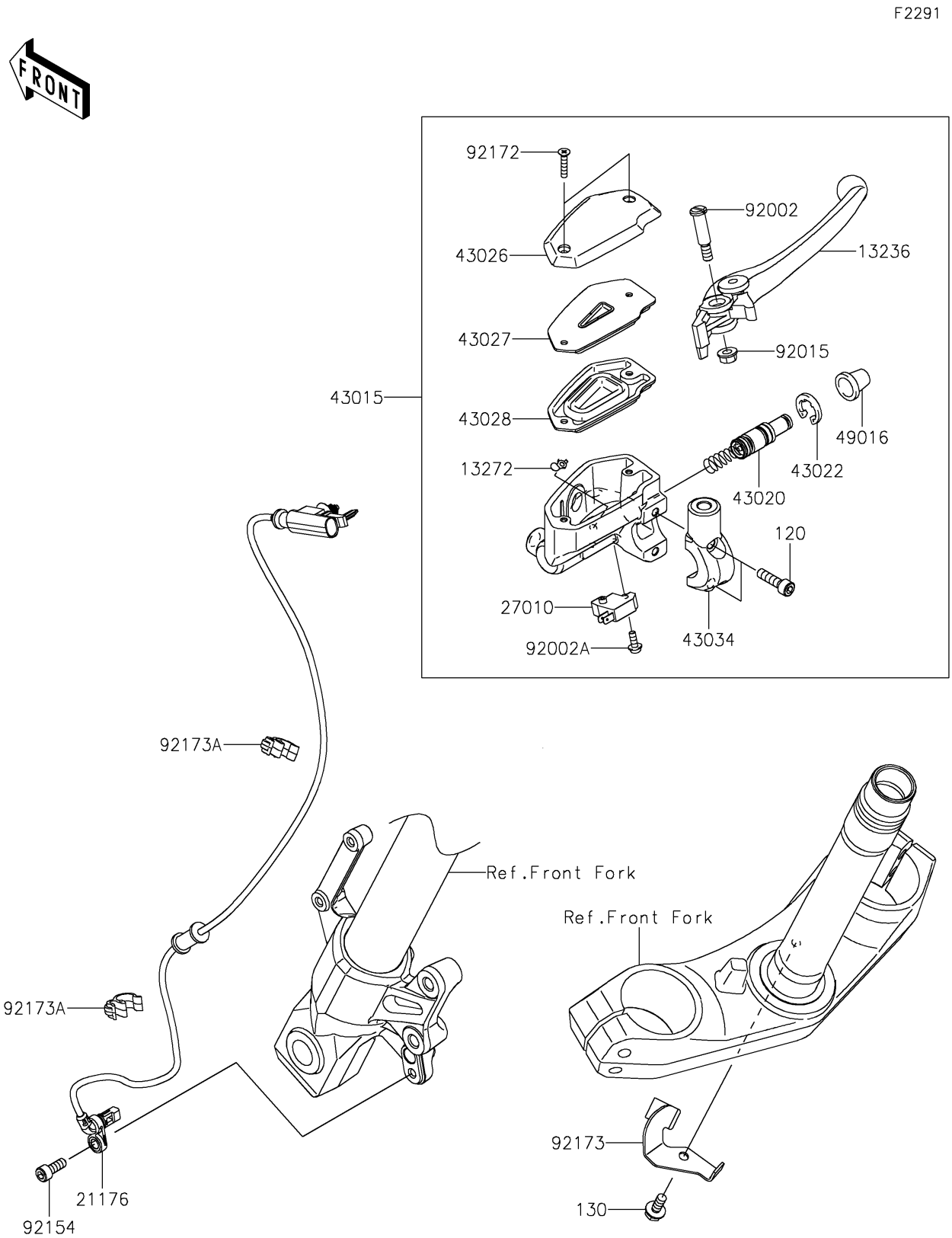

© 2026 Kawasaki Motors Corp., U.S.A.

2022 VERSYS® 650

PARTS LIST

Front Master Cylinder

ITEM NAME	PART NUMBER	QUANTITY
LEVER-COMP,FRONT BRAKE (Ref # 13236)	13236-0140	1
PLATE (Ref # 13272)	13272-0573	1
SENSOR,FR (Ref # 21176)	21176-0942	1
SWITCH,BRAKE (Ref # 27010)	27010-0762	1
CYLINDER-ASSY-MASTER,FR (Ref # 43015)	43015-0601	1
PISTON-COMP-BRAKE (Ref # 43020)	43020-0008	1
STOPPER-BRAKE,PISTON (Ref # 43022)	43022-1010	1
CAP-BRAKE (Ref # 43026)	43026-0019	1
PLATE-DIAPHRAGM (Ref # 43027)	43027-0008	1
DIAPHRAGM (Ref # 43028)	43028-0015	1
HOLDER-BRAKE,MASTER CYLINDER (Ref # 43034)	43034-0049	1
COVER-SEAL,MASTER CYLINDER (Ref # 49016)	49016-1044	1
BOLT,LEVER SET,BLACK (Ref # 92002)	92002-1322	1
BOLT,SCREW,4X12 (Ref # 92002A)	92002-1323	1
NUT,FLANGED,6MM (Ref # 92015)	92015-1528	1
BOLT,SOCKET,6X16 (Ref # 92154)	92154-0235	1
SCREW,4X20 (Ref # 92172)	92172-0320	2
CLAMP,FORK UNDER HOLDER (Ref # 92173)	92173-1288	1
CLAMP,HOSE&SENSOR LINE (Ref # 92173A)	92173-1613	2
BOLT-SOCKET,6X22 (Ref # 120)	120CB0622	2
BOLT-FLANGED,6X14 (Ref # 130)	130BA0614	1

© 2026 Kawasaki Motors Corp., U.S.A.