2022 VERSYS® 650

PARTS DIAGRAM

Starter Motor

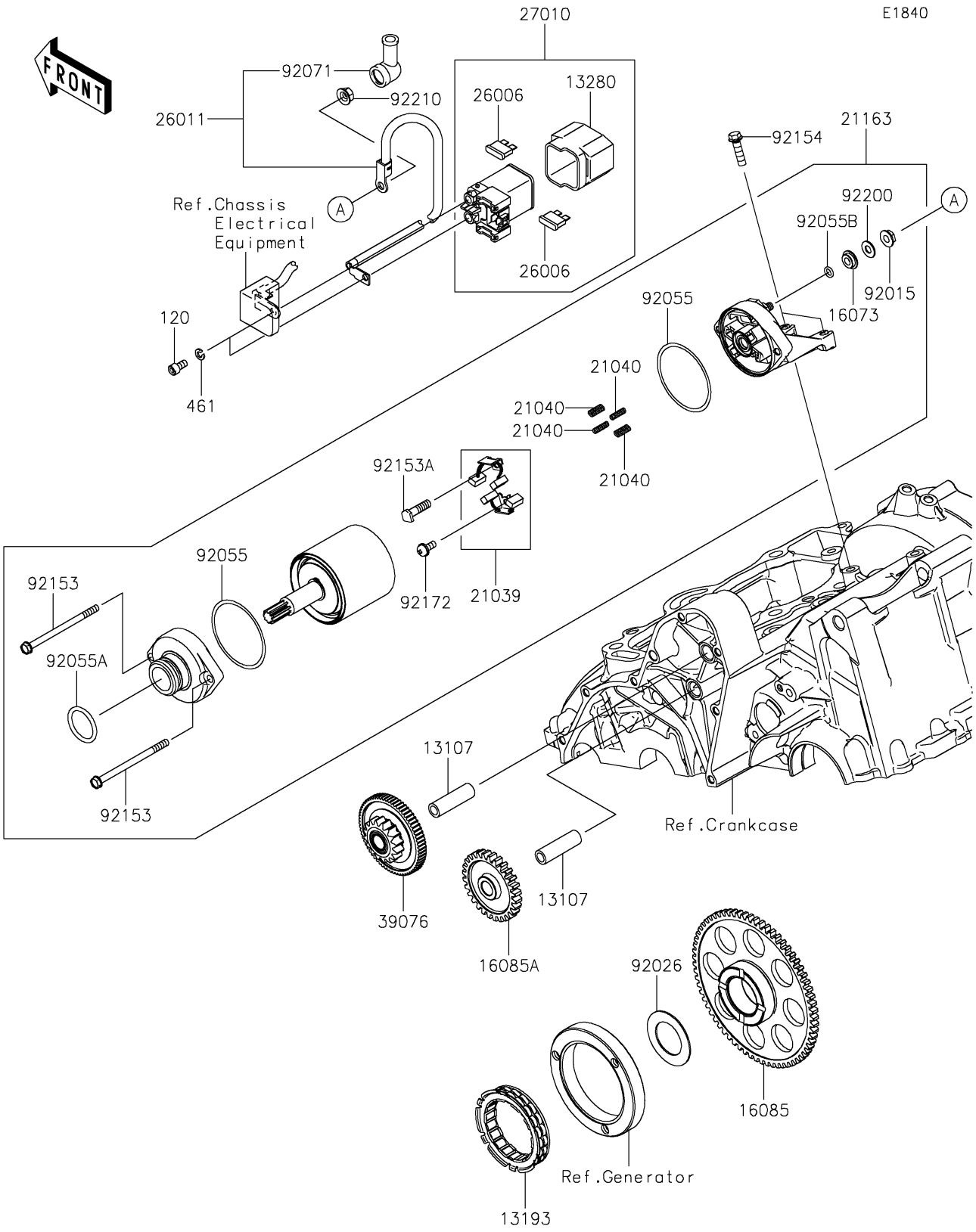

© 2026 Kawasaki Motors Corp., U.S.A.

2022 VERSYS® 650

PARTS LIST

Starter Motor

Kawasaki
Let the Good Times Roll®

ITEM NAME	PART NUMBER	QUANTITY
SHAFT,IDLE GEAR (Ref # 13107)	13107-1106	2
CLUTCH-ASSY-ONEWAY (Ref # 13193)	13193-0006	1
HOLDER (Ref # 13280)	13280-0301	1
INSULATOR (Ref # 16073)	16073-0053	1
GEAR,67T (Ref # 16085)	16085-0076	1
GEAR,IDLE,28T (Ref # 16085A)	16085-0148	1
BRUSH,CARBON (Ref # 21039)	21039-0004	1
SPRING-BRUSH (Ref # 21040)	21040-0003	4
STARTER-ELECTRIC (Ref # 21163)	21163-0746	1
FUSE,BLADE,30A,GREEN (Ref # 26006)	26006-1006	2
WIRE-LEAD (Ref # 26011)	26011-0873	1
SWITCH,MAGNETIC (Ref # 27010)	27010-0099	1
LIMITER,16T&66T (Ref # 39076)	39076-0034	1
NUT,STARTER MOTOR (Ref # 92015)	92015-1476	1
SPACER,29.1X47.5X1.2 (Ref # 92026)	92026-087	1
RING-O (Ref # 92055)	92055-0136	2
RING-O (Ref # 92055A)	92055-1276	1
RING-O,4.5X2.0 (Ref # 92055B)	92055-1370	1
GROMMET (Ref # 92071)	92071-0024	1
BOLT (Ref # 92153)	92153-1850	2
BOLT (Ref # 92153A)	92153-1866	1
BOLT,FLANGED,6X22 (Ref # 92154)	92154-0504	2
SCREW (Ref # 92172)	92172-0334	1
WASHER (Ref # 92200)	92200-0386	1
NUT,6MM (Ref # 92210)	92210-0188	1
BOLT-SOCKET,6X10 (Ref # 120)	120CB0610	2
WASHER-SPRING,6MM (Ref # 461)	461DB0600	2

© 2026 Kawasaki Motors Corp., U.S.A.