2009 KLX®140L

PARTS DIAGRAM

Chassis Electrical Equipment

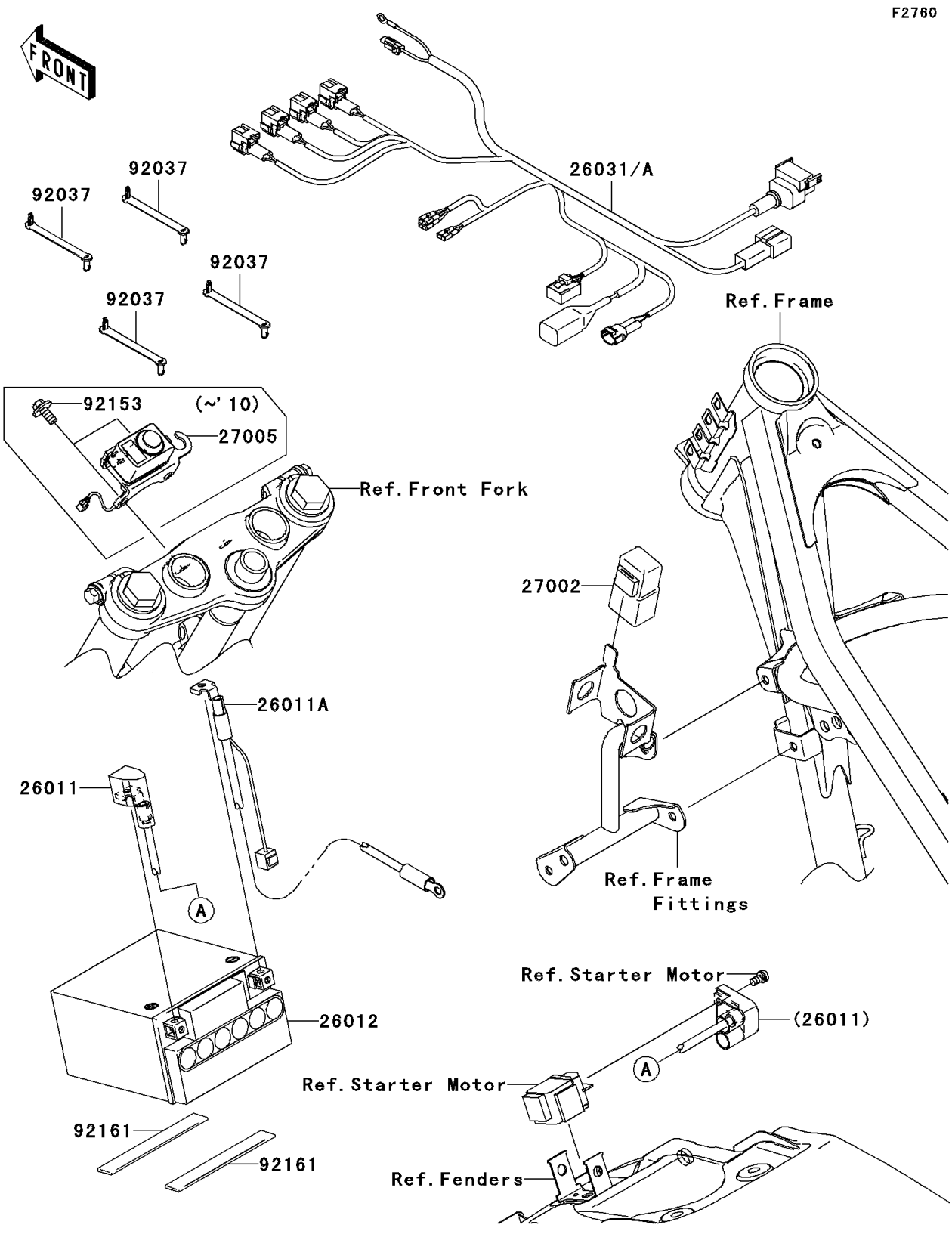

© 2026 Kawasaki Motors Corp., U.S.A.

2009 KLX®140L

PARTS LIST

Chassis Electrical Equipment

ITEM NAME	PART NUMBER	QUANTITY
WIRE-LEAD,BATTERY(+) (Ref # 26011)	26011-0153	1
WIRE-LEAD,BATTERY(-) (Ref # 26011A)	26011-0154	1
BATTERY,FTX7L-BS,12V6AH (Ref # 26012)	26012-0068	1
HARNESS,MAIN (Ref # 26031)	26031-0542	1
RELAY-ASSY (Ref # 27002)	27002-1086	1
SWITCH-ASSY-IGNITION (Ref # 27005)	27005-0047	1
CLAMP,SPEED,L=58 (Ref # 92037)	92037-1163	4
BOLT,FLANGED,6X14 (Ref # 92153)	92153-0936	2
DAMPER (Ref # 92161)	92161-0543	2

© 2026 Kawasaki Motors Corp., U.S.A.