2003 Z1000 (European)

PARTS DIAGRAM

Manual

F2920

Owner's Manual
(Local Procurement)

99923/99947/99972/99984/99986/99992
99976/A/99986A/B

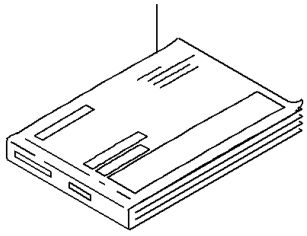

	Ref.No.	Language
('03)	(99923)	German
	(99947)	French
	(99972)	Spanish
	(99984)	Dutch
	(99986)	English
	(99992)	Italian
('04)	(99976)	English
		French
		German
		Italian
	(99986A)	English
('05)	(99976A)	English
		French
		German
		Italian
	(99986B)	English

Service Manual

99953/99954/99955

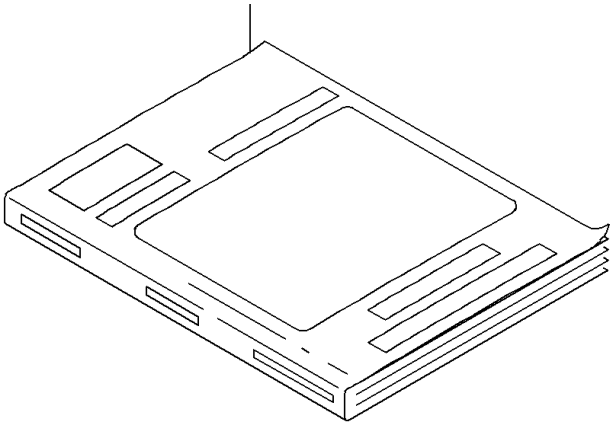

Ref.No	Language
(99953)	German
(99954)	French
(99955)	Italian

© 2026 Kawasaki Motors Corp., U.S.A.

2003 Z1000 (European)

PARTS LIST

Manual

ITEM NAME	PART NUMBER	QUANTITY
OWNER'S MANUAL,GERMAN (Ref # 99923)	99923-1564	1
OWNER'S MANUAL,FRENCH (Ref # 99947)	99947-1323	1
SERVICE MANUAL,GERMAN (Ref # 99953)	99953-1002-01	1
SERVICE MANUAL,FRENCH (Ref # 99954)	99954-1004-01	1
SERVICE MANUAL,ITALIAN (Ref # 99955)	99955-1003-01	1
OWNER'S MANUAL,SPANISH (Ref # 99972)	99972-1041	1
OWNER'S MANUAL,DUTCH (Ref # 99984)	99984-1024	1
OWNER'S MANUAL,ENGLISH (Ref # 99986)	99986-1147	1
OWNER'S MANUAL,ITALIAN (Ref # 99992)	99992-1012	1

© 2026 Kawasaki Motors Corp., U.S.A.