# 2023 Ninja® 400 ABS

## PARTS DIAGRAM

### Swingarm

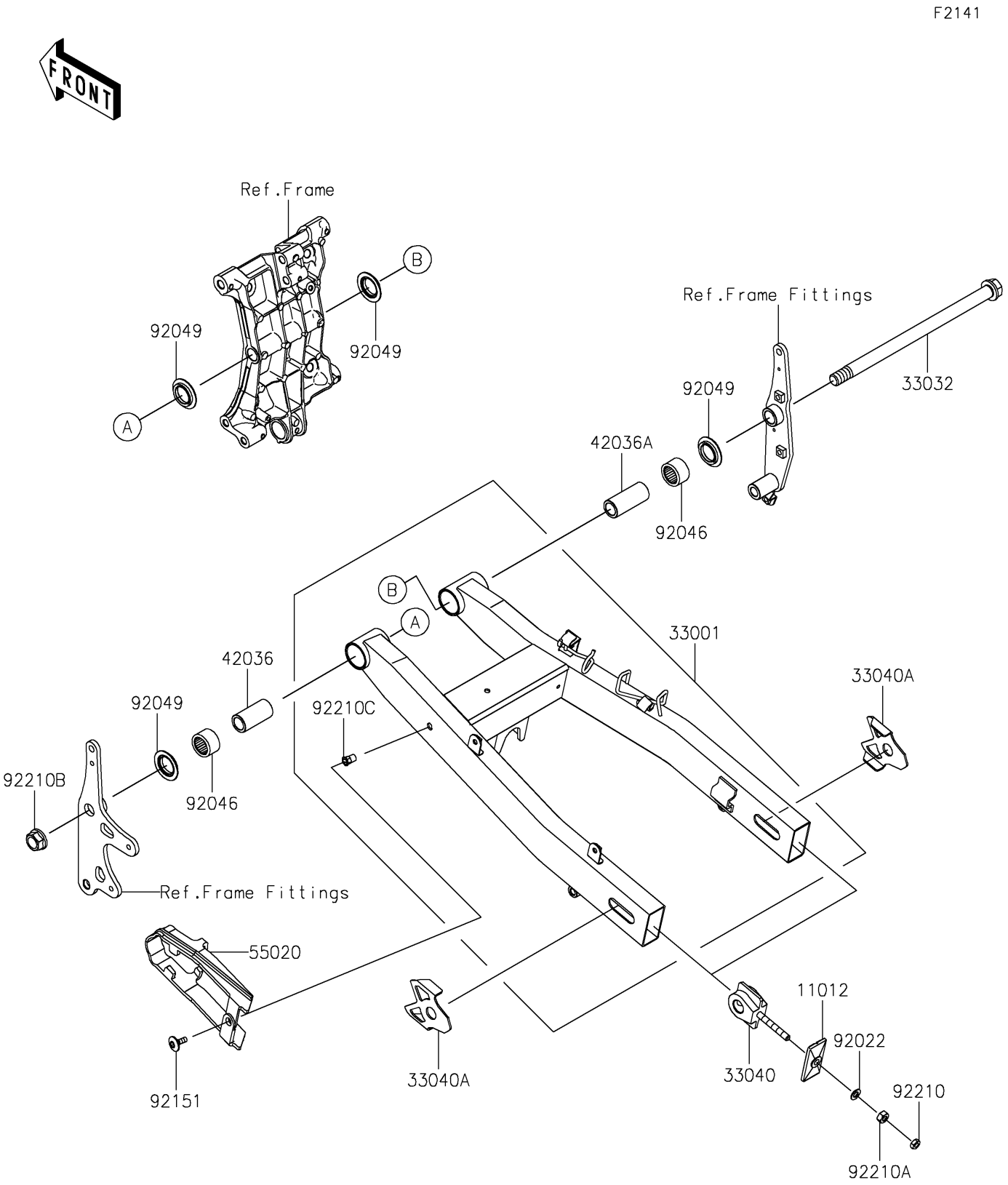


© 2026 Kawasaki Motors Corp., U.S.A.

# 2023 Ninja® 400 ABS

## PARTS LIST

### Swingarm

| ITEM NAME | PART NUMBER | QUANTITY |
|---|---|---|

© 2026 Kawasaki Motors Corp., U.S.A.