2023 KLX230R

PARTS DIAGRAM

Generator

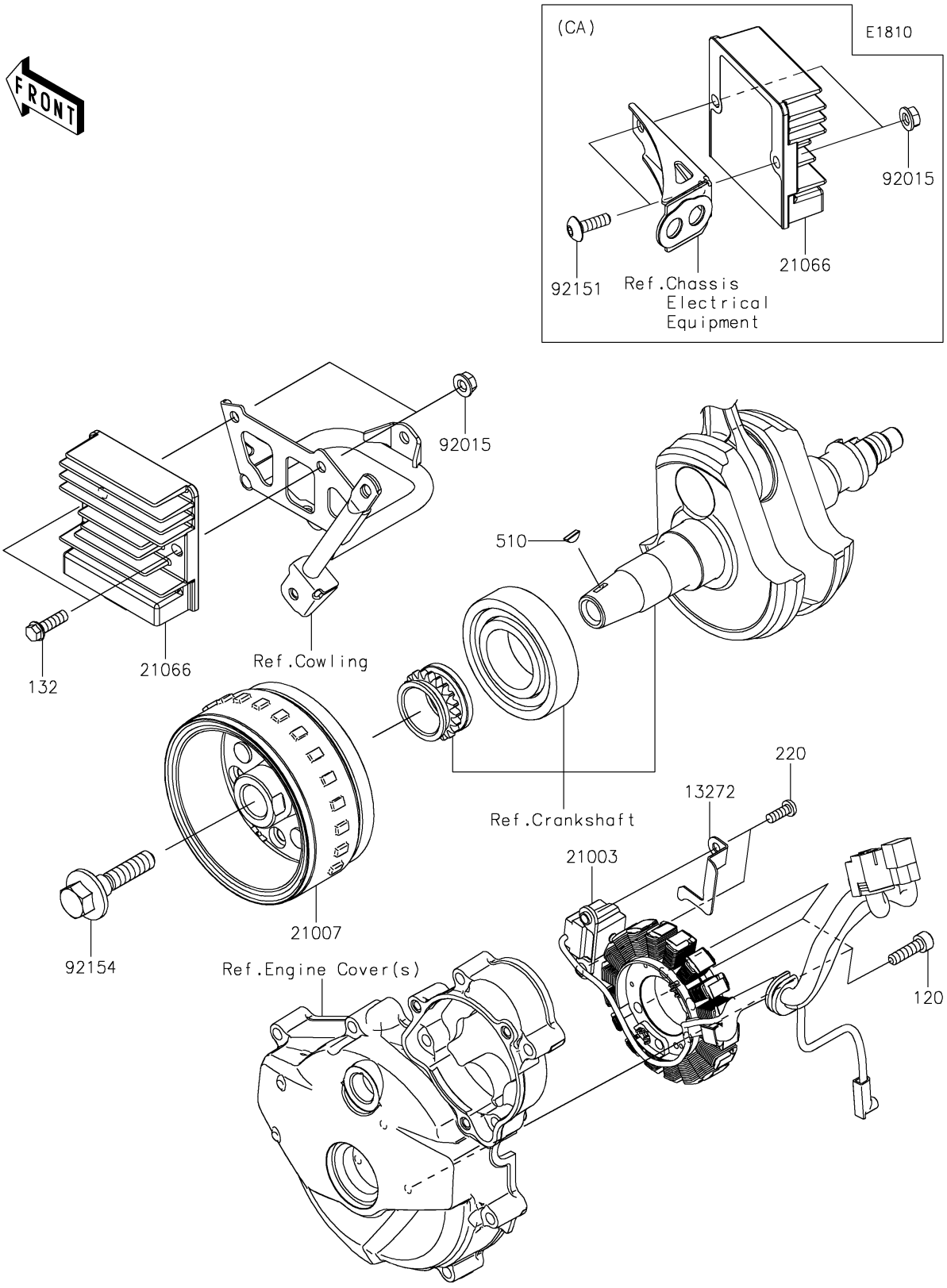

© 2026 Kawasaki Motors Corp., U.S.A.

2023 KLX230R

PARTS LIST

Generator

ITEM NAME	PART NUMBER	QUANTITY
PLATE,PULSING COIL (Ref # 13272)	13272-2615	1
STATOR (Ref # 21003)	21003-0199	1
ROTOR (Ref # 21007)	21007-0680	1
REGULATOR-VOLTAGE (Ref # 21066)	21066-0775	1
NUT,FLANGED,6MM (Ref # 92015)	92015-1367	2
BOLT,SOCKET,6X20 (Ref # 92151)	92151-1750	2
BOLT (Ref # 92154)	92154-1309	1
BOLT-SOCKET,6X22 (Ref # 120)	120CA0622	3
BOLT-FLANGED-SMALL,6X20 (Ref # 132)	132BA0620	2
SCREW-PAN-CROS,5X14 (Ref # 220)	220AA0514	2
KEY-WOODRUFF (Ref # 510)	510A3100	1

© 2026 Kawasaki Motors Corp., U.S.A.