2023 NINJA H2® SX SE

PARTS DIAGRAM

Swingarm

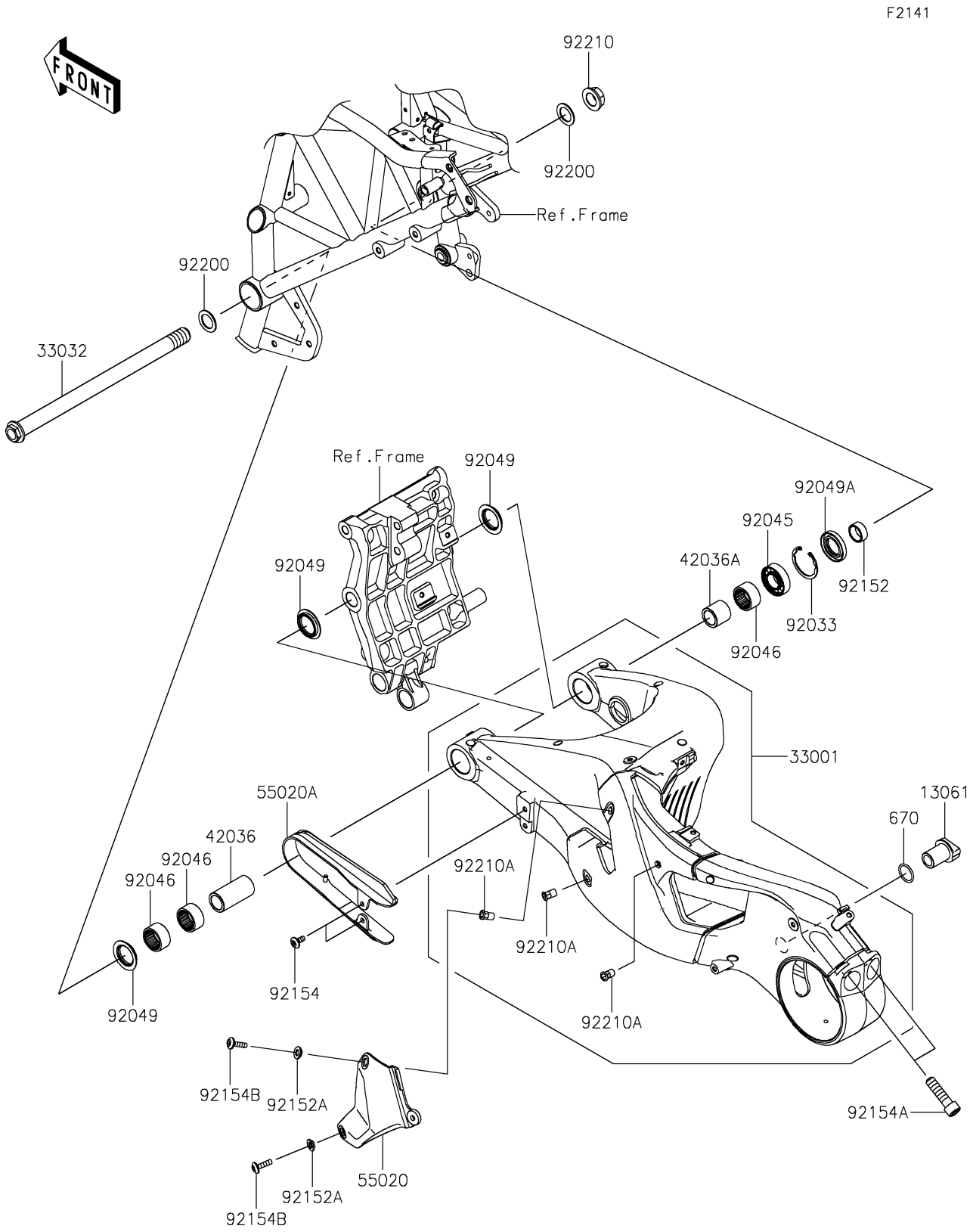

© 2026 Kawasaki Motors Corp., U.S.A.

2023 NINJA H2® SX SE

PARTS LIST

Swingarm

ITEM NAME	PART NUMBER	QUANTITY
BOSS,CALIPER HOLDER (Ref # 13061)	13061-0744	1
ARM-COMP-SWING,M.F.S.BLACK (Ref # 33001)	33001-0687-46R	1
SHAFT-SWING ARM,20X313 (Ref # 33032)	33032-0049	1
SLEEVE,20.1X28X56.5 (Ref # 42036)	42036-0757	1
SLEEVE,20.1X28X25.7 (Ref # 42036A)	42036-0762	1
GUARD,HEEL (Ref # 55020)	55020-2200	1
GUARD,CHAIN SLIDER (Ref # 55020A)	55020-2204	1
RING-SNAP,42MM (Ref # 92033)	92033-1041	1
BEARING-BALL,6004UL11 (Ref # 92045)	92045-0017	1
BEARING-NEEDLE,7E-HVS 28X34X17 (Ref # 92046)	92046-0008	3
SEAL-OIL,28X34X5.7 (Ref # 92049)	92049-1181	3
SEAL-OIL,MHSA25X42X6 (Ref # 92049A)	92049-1314	1
COLLAR,20.2X25X10.5 (Ref # 92152)	92152-1948	1
COLLAR,6.5X16X4.6 (Ref # 92152A)	92152-2495	2
BOLT,SOCKET,6X14 (Ref # 92154)	92154-1025	2
BOLT,SOCKET,12X45 (Ref # 92154A)	92154-1552	2
BOLT,SOCKET,6X22 (Ref # 92154B)	92154-1810	2
WASHER,20.5X31X1.5 (Ref # 92200)	92200-1791	2
NUT,FLANGED,20MM (Ref # 92210)	92210-0320	1
NUT,POP,6MM,L=16.5 (Ref # 92210A)	92210-0324	3
O RING,22MM (Ref # 670)	670B2022	1

© 2026 Kawasaki Motors Corp., U.S.A.