2022 Ninja® 400 ABS

PARTS DIAGRAM

Brake Pedal/Torque Link

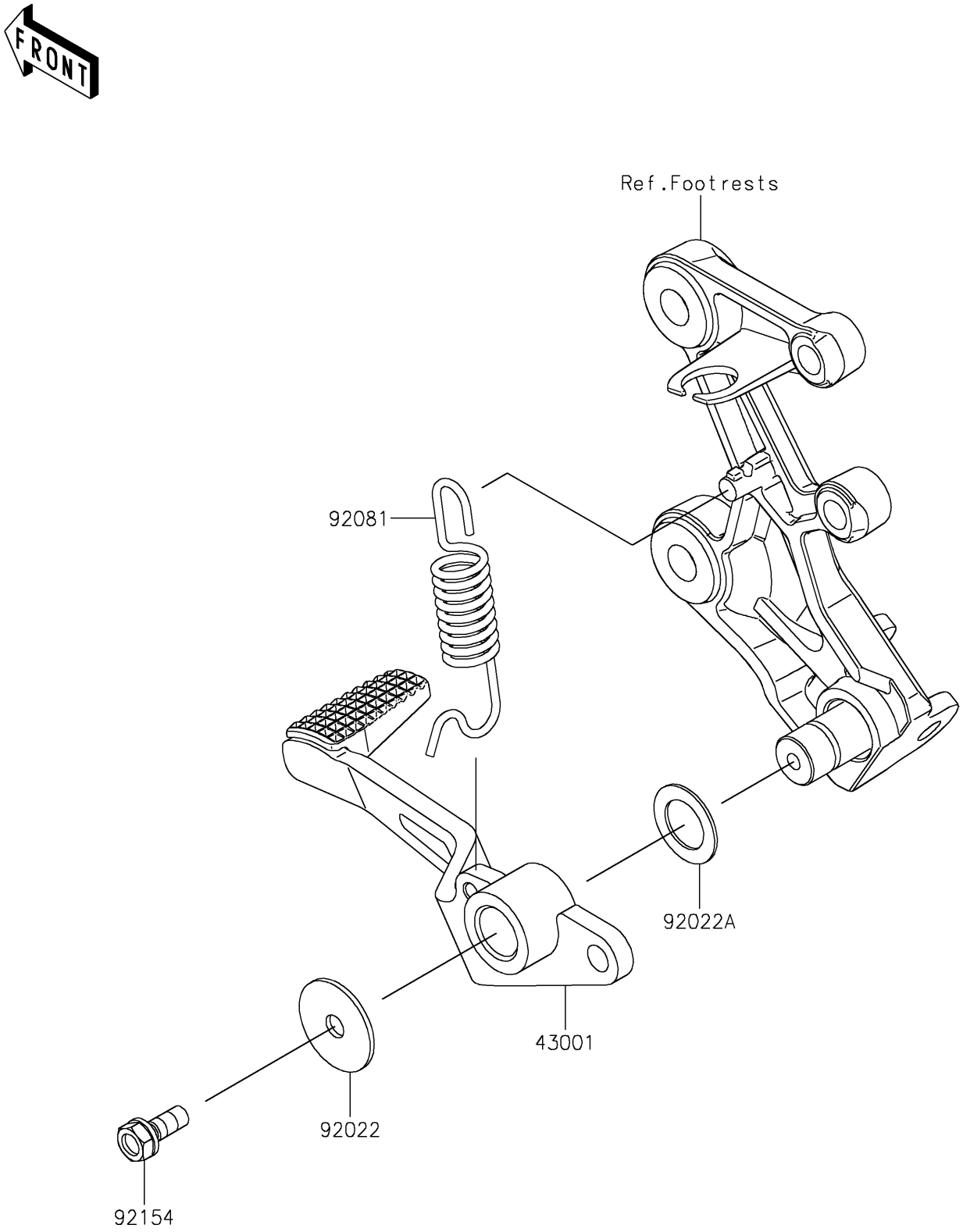

© 2026 Kawasaki Motors Corp., U.S.A.

2022 Ninja® 400 ABS

PARTS LIST

Brake Pedal/Torque Link

ITEM NAME	PART NUMBER	QUANTITY
LEVER-BRAKE,RR (Ref # 43001)	43001-0756	1
WASHER,7X28X1.6 (Ref # 92022)	92022-1282	1
WASHER,15.3X24X1 (Ref # 92022A)	92022-326	1
SPRING,BRAKE PEDAL (Ref # 92081)	92081-1833	1
BOLT,UPSET-WS,6X16 (Ref # 92154)	92154-0935	1

© 2026 Kawasaki Motors Corp., U.S.A.