2022 Ninja® 400 ABS

PARTS DIAGRAM

Rear Wheel/Chain

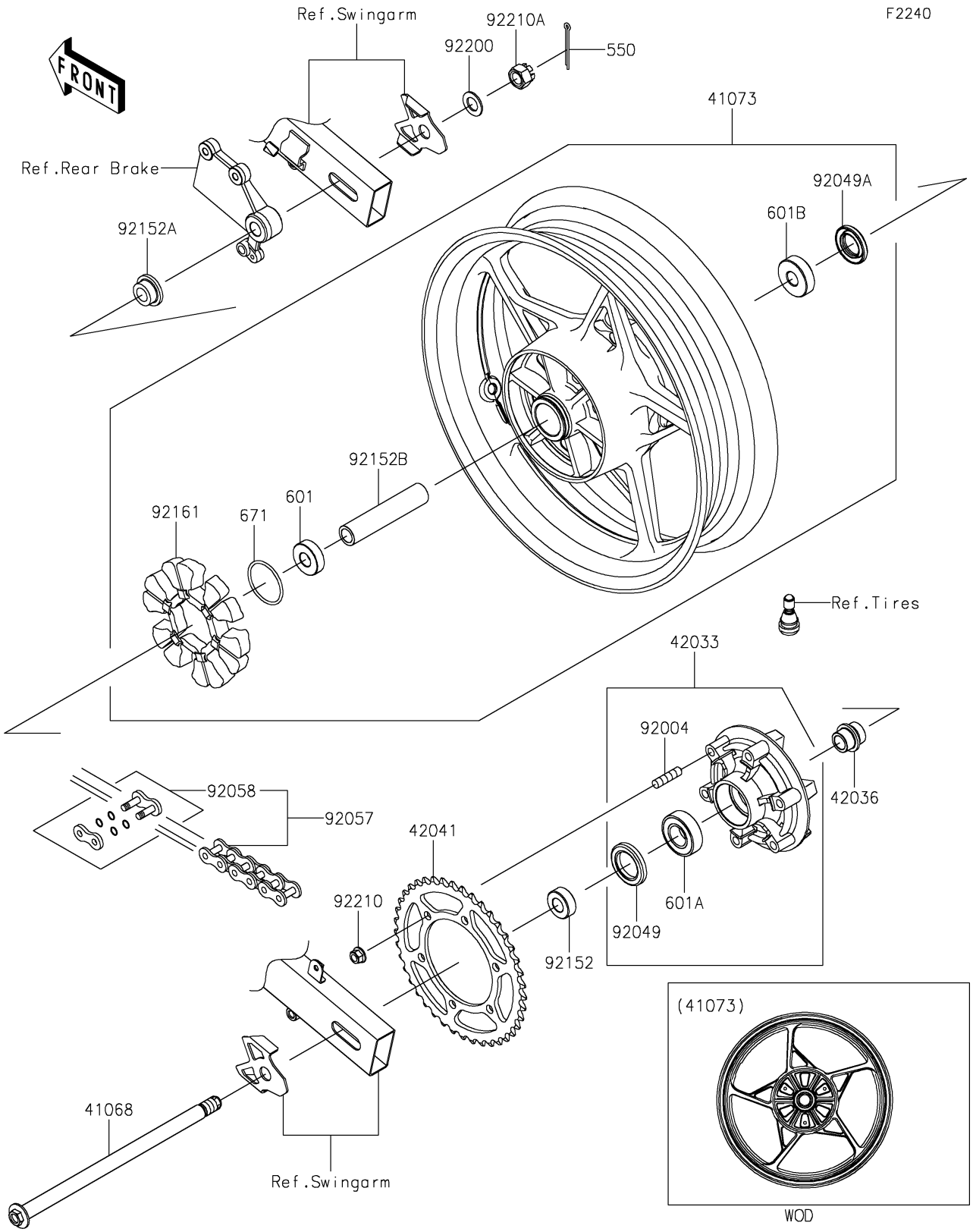

© 2026 Kawasaki Motors Corp., U.S.A.

2022 Ninja® 400 ABS

PARTS LIST

Rear Wheel/Chain

ITEM NAME	PART NUMBER	QUANTITY
AXLE,RR,17X322,M16 (Ref # 41068)	41068-0628	1
WHEEL-ASSY,RR,G.BLACK (Ref # 41073)	41073-0753-QT	1
COUPLING-ASSY,RR HUB (Ref # 42033)	42033-0574	1
SLEEVE,RR HUB,L=30 (Ref # 42036)	42036-1055	1
SPROCKET-HUB,41T (Ref # 42041)	42041-0162	1
STUD,10X19 (Ref # 92004)	92004-0048	6
SEAL-OIL,35X52X7 (Ref # 92049)	92049-0730	1
SEAL-OIL,27X47X7 (Ref # 92049A)	92049-0802	1
CHAIN,DRIVE,EK520SR-O2X106L (Ref # 92057)	92057-0019	1
JOINT-CHAIN,DRIVE (Ref # 92058)	92058-1102	1
COLLAR,17X35X13 (Ref # 92152)	92152-0843	1
COLLAR,17X28(38)X15 (Ref # 92152A)	92152-0844	1
COLLAR,17.2X25X121 (Ref # 92152B)	92152-2387	1
DAMPER,RR HUB SHOCK (Ref # 92161)	92161-0700	1
WASHER,17.3X30X2 (Ref # 92200)	92200-1916	1
NUT,LOCK,FLANGED,10MM (Ref # 92210)	92210-1139	6
NUT,16MM (Ref # 92210A)	92210-1651	1
PIN-COTTER,4.0X35 (Ref # 550)	550AA4035	1
BEARING-BALL,#6203UUC3 (Ref # 601)	601B6203UU	1
BEARING-BALL,#6205G (Ref # 601A)	601B6205G	1
BEARING-BALL,6303LLUC3/2ASU68 (Ref # 601B)	601B6303UU	1
O RING,50MM (Ref # 671)	671B2550	1

© 2026 Kawasaki Motors Corp., U.S.A.