2022 Ninja® 400 ABS

PARTS DIAGRAM

Swingarm

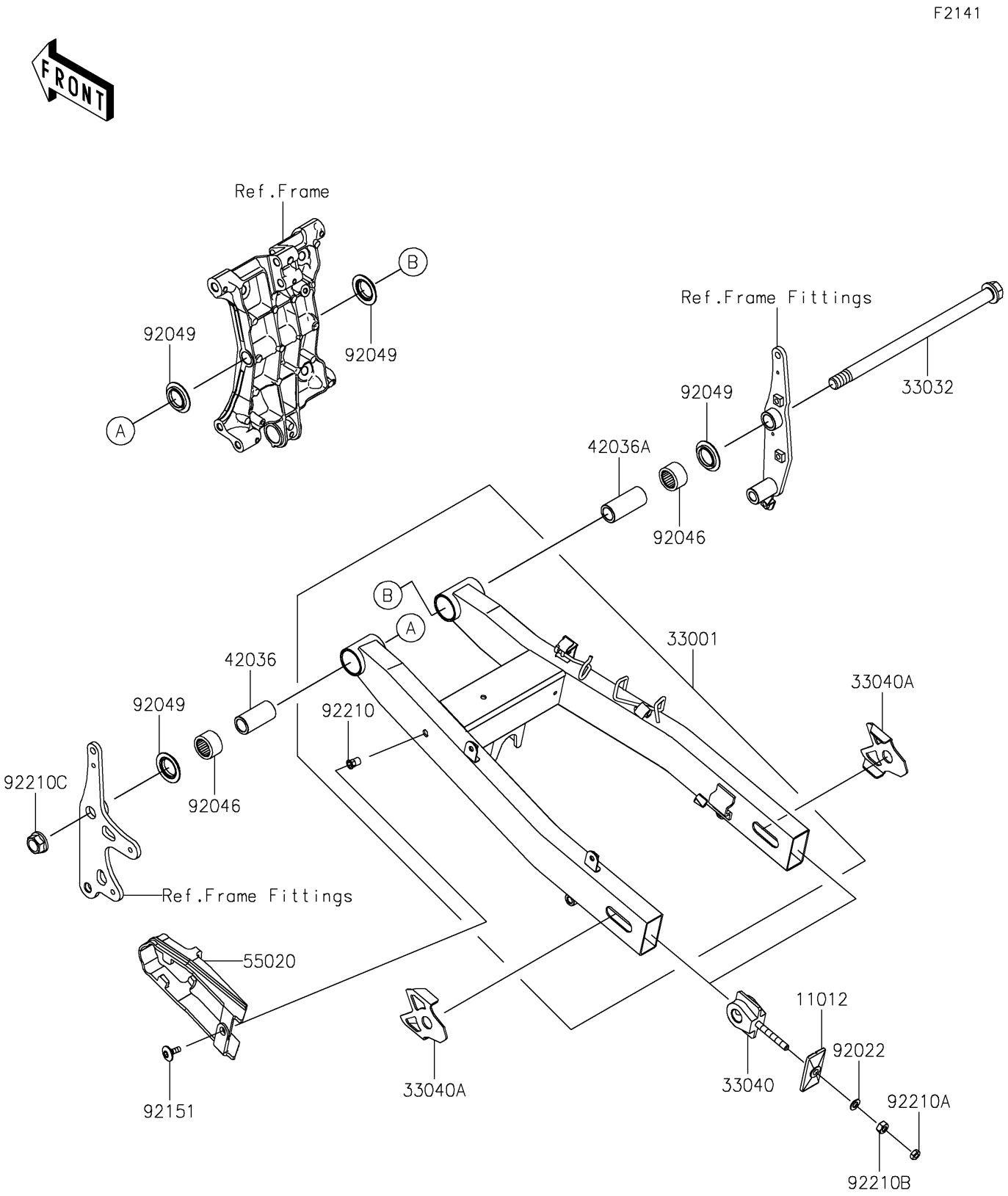

© 2026 Kawasaki Motors Corp., U.S.A.

2022 Ninja® 400 ABS

PARTS LIST

Swingarm

ITEM NAME	PART NUMBER	QUANTITY
CAP,CHAIN ADJUSTER,F.S.BLACK (Ref # 11012)	11012-1871-18R	2
ARM-COMP-SWING,F.S.BLACK (Ref # 33001)	33001-0681-18R	1
SHAFT-SWING ARM,17X285 (Ref # 33032)	33032-0056	1
ADJUSTER-CHAIN (Ref # 33040)	33040-0089	2
ADJUSTER-CHAIN,F.S.BLACK (Ref # 33040A)	33040-0090-18R	2
SLEEVE (Ref # 42036)	42036-0805	1
SLEEVE (Ref # 42036A)	42036-0806	1
GUARD,CHAIN (Ref # 55020)	55020-2199	1
WASHER,8.5X16X1.2 (Ref # 92022)	92022-1582	2
BEARING-NEEDLE,BM2520 (Ref # 92046)	92046-1228	2
SEAL-OIL,MF025N1 (Ref # 92049)	92049-1426	4
BOLT,SOCKET,6X18 (Ref # 92151)	92151-1149	1
NUT,POP,6MM,L=15 (Ref # 92210)	92210-1397	1
NUT,8MM,5X12 (Ref # 92210A)	92210-1588	2
NUT,8MM,6.5X14 (Ref # 92210B)	92210-1589	2
NUT,16MM (Ref # 92210C)	92210-1590	1

© 2026 Kawasaki Motors Corp., U.S.A.