2022 Ninja® 400 ABS

PARTS DIAGRAM

Fuel Evaporative System(CA)

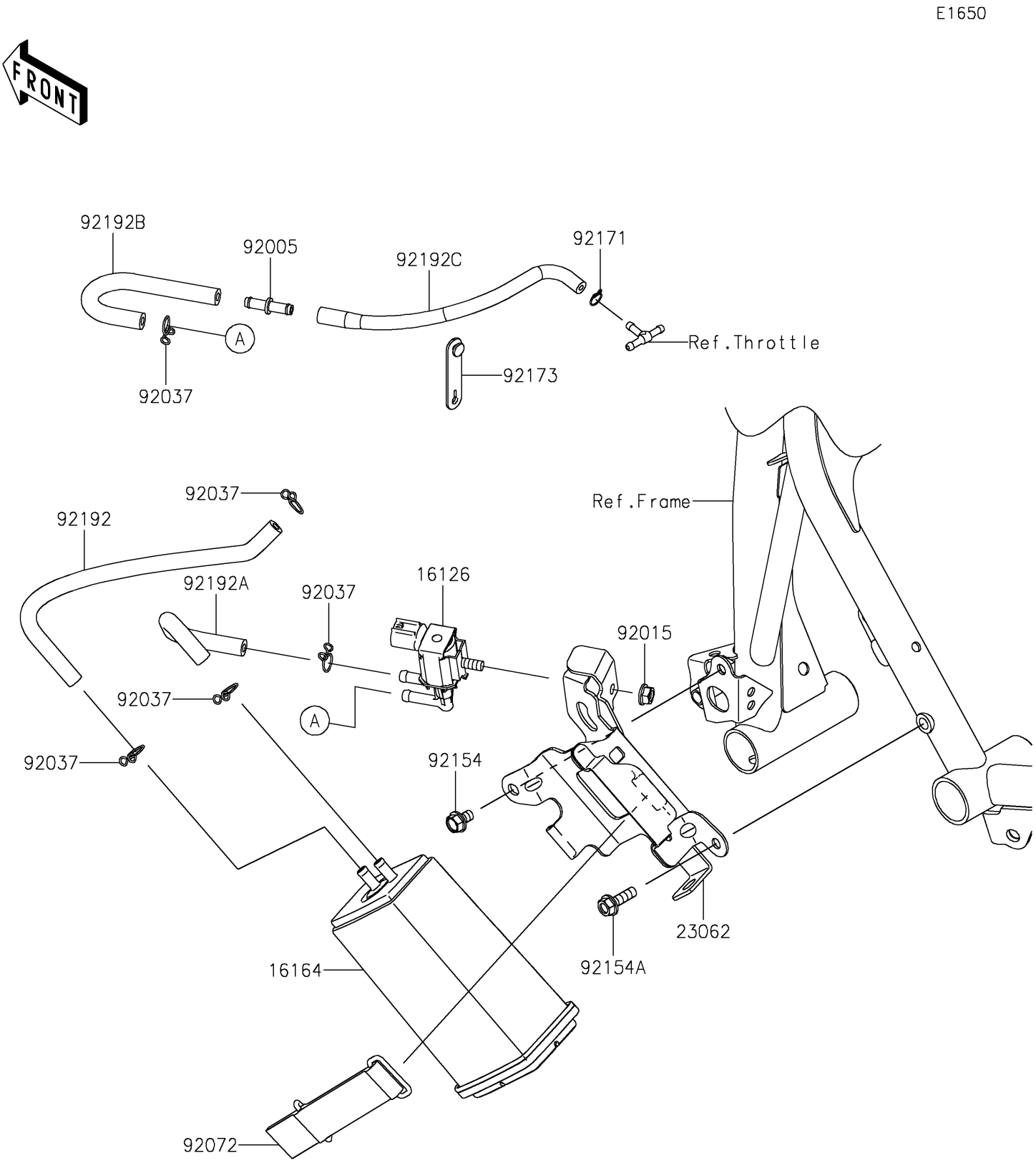

© 2026 Kawasaki Motors Corp., U.S.A.

2022 Ninja® 400 ABS

PARTS LIST

Fuel Evaporative System(CA)

Kawasaki
Let the Good Times Roll®

ITEM NAME	PART NUMBER	QUANTITY
VALVE,SOLENOID (Ref # 16126)	16126-0705	1
CANISTER (Ref # 16164)	16164-0012	1
BRACKET-COMP,CANISTER (Ref # 23062)	23062-0949	1
FITTING (Ref # 92005)	92005-0721	1
NUT,FLANGED,6MM (Ref # 92015)	92015-1367	1
CLAMP,TUBE (Ref # 92037)	92037-147	5
BAND,CANISTER (Ref # 92072)	92072-0815	1
BOLT,FLANGED,6X10 (Ref # 92154)	92154-2939	1
BOLT-FLANGED,6X20 (Ref # 92154A)	92154-3812	1
CLAMP (Ref # 92171)	92171-0573	1
CLAMP,RUBBER PLATE (Ref # 92173)	92173-1229	1
TUBE,FUEL TANK-CANISTER (Ref # 92192)	92192-1806	1
TUBE,CANISTER-VALVE SOLENOID (Ref # 92192A)	92192-1807	1
TUBE,SOLENOID VALVE-FITTING (Ref # 92192B)	92192-1808	1
TUBE,FITTING-THROTTLE BODY (Ref # 92192C)	92192-1920	1

© 2026 Kawasaki Motors Corp., U.S.A.