2022 NINJA® 400

PARTS DIAGRAM

Crankcase

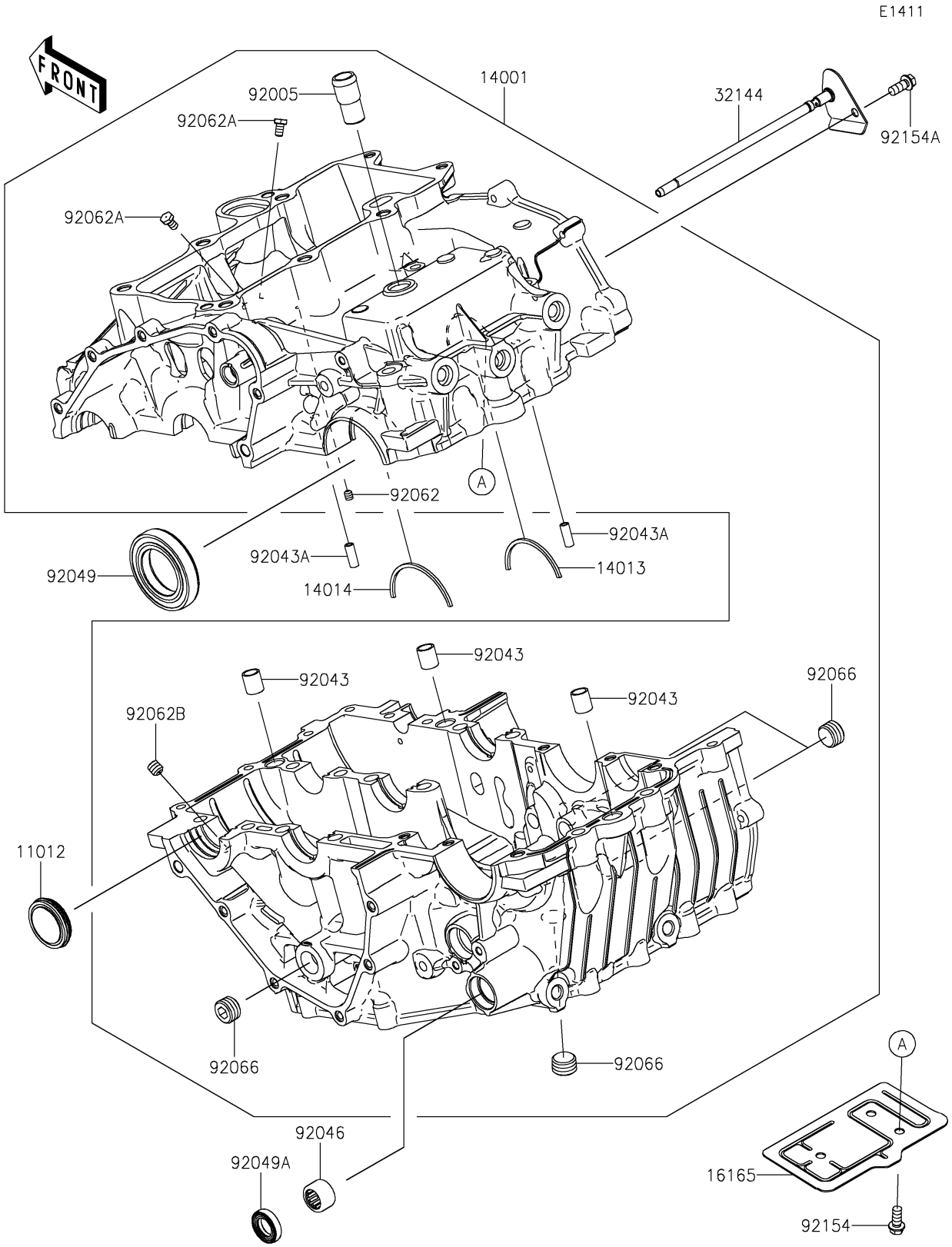

© 2026 Kawasaki Motors Corp., U.S.A.

2022 NINJA® 400

PARTS LIST

Crankcase

ITEM NAME	PART NUMBER	QUANTITY
CAP,LH (Ref # 11012)	11012-1770	1
SET-CRANKCASE (Ref # 14001)	14001-0717	1
RING-POSITION (Ref # 14013)	14013-004	1
PLATE-POSITION (Ref # 14014)	14014-0576	1
SEPARATOR (Ref # 16165)	16165-0016	1
PIPE-ASSY (Ref # 32144)	32144-0008	1
FITTING,BREATHER (Ref # 92005)	92005-0713	1
PIN,12X14 (Ref # 92043)	92043-0963	3
PIN,3.5X6X16 (Ref # 92043A)	92043-1309	2
BEARING-NEEDLE,HK1412FM (Ref # 92046)	92046-0043	1
SEAL-OIL (Ref # 92049)	92049-0799	1
SEAL-OIL,TC14245 (Ref # 92049A)	92049-1520	1
NOZZLE (Ref # 92062)	92062-0004	1
NOZZLE (Ref # 92062A)	92062-0047	2
NOZZLE (Ref # 92062B)	92062-0048	1
PLUG,PT3/8X10 (Ref # 92066)	92066-0003	4
BOLT,FLANGED,6X14 (Ref # 92154)	92154-1426	3
BOLT,FLANGED,6X14 (Ref # 92154A)	92154-2907	1

© 2026 Kawasaki Motors Corp., U.S.A.