2022 Ninja® 400 ABS

PARTS DIAGRAM

Gear Change Drum/Shift Fork(s)

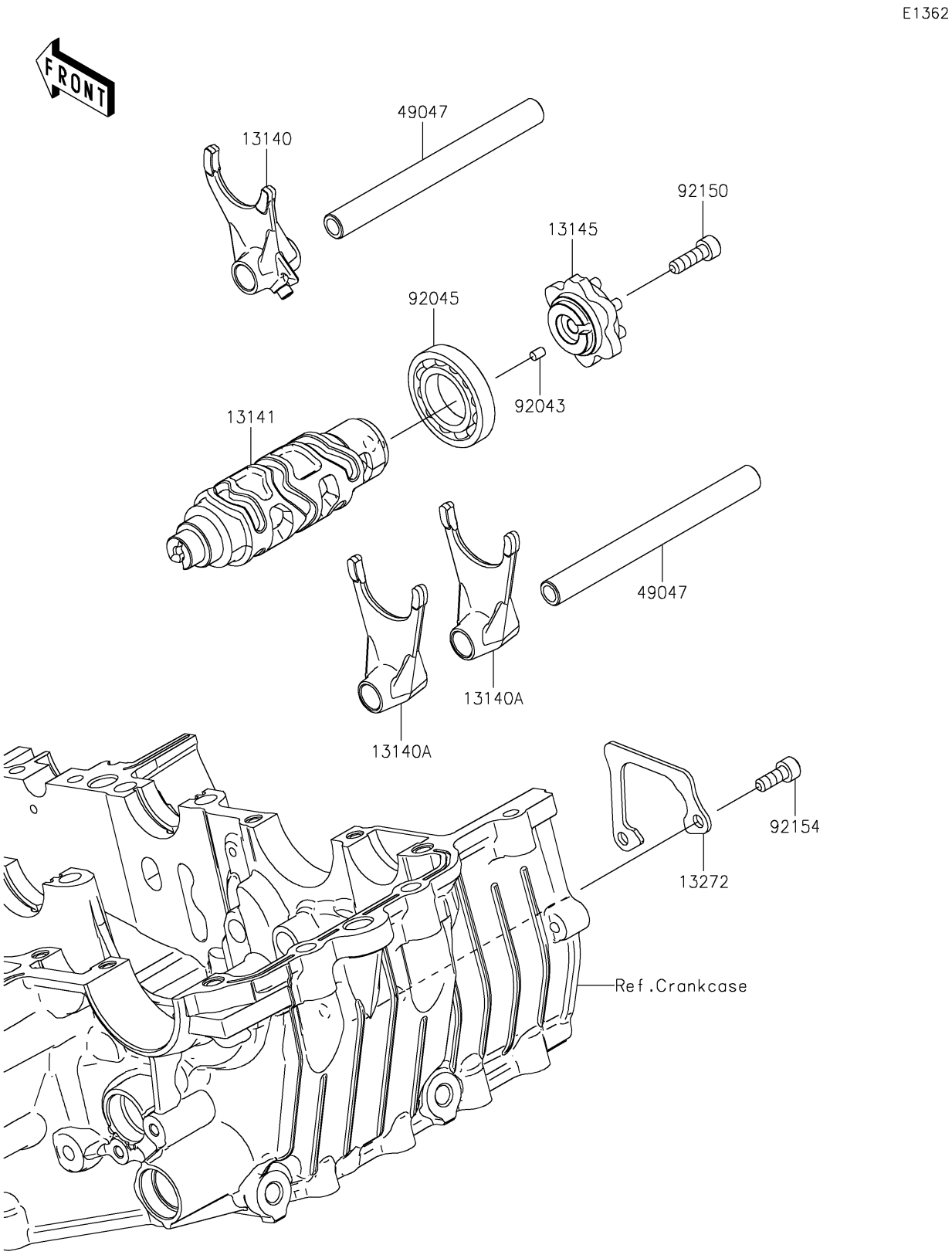

© 2026 Kawasaki Motors Corp., U.S.A.

2022 Ninja® 400 ABS

PARTS LIST

Gear Change Drum/Shift Fork(s)

ITEM NAME	PART NUMBER	QUANTITY

© 2026 Kawasaki Motors Corp., U.S.A.