2022 Ninja® 400 ABS

PARTS DIAGRAM

Cylinder Head

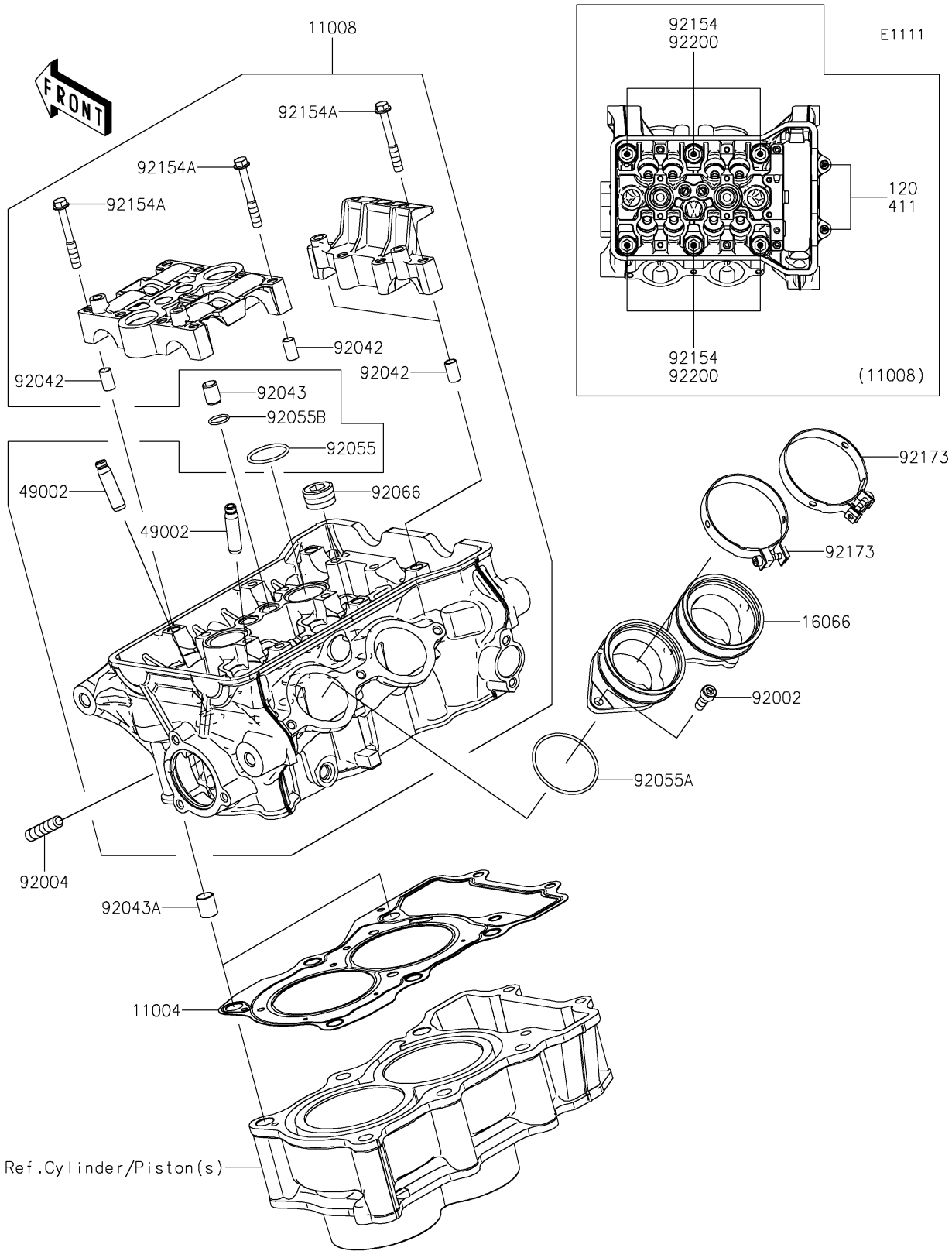

© 2026 Kawasaki Motors Corp., U.S.A.

2022 Ninja® 400 ABS

PARTS LIST

Cylinder Head

ITEM NAME	PART NUMBER	QUANTITY
GASKET-HEAD (Ref # 11004)	11004-0774	1
HEAD-COMP-CYLINDER (Ref # 11008)	11008-0967	1
HOLDER-THROTTLE BODY (Ref # 16066)	16066-0007	1
GUIDE-VALVE (Ref # 49002)	49002-0009	8
BOLT,6X16 (Ref # 92002)	92002-1143	3
STUD,8X25 (Ref # 92004)	92004-0731	4
PIN,DOWEL,6.3X8X14 (Ref # 92042)	92042-007	4
PIN,8.2X10X14 (Ref # 92043)	92043-1264	2
PIN,10.1X12X14 (Ref # 92043A)	92043-4009	2
RING-O,25.5X2 (Ref # 92055)	92055-0074	2
RING-O,44.5X1.9 (Ref # 92055A)	92055-0890	2
RING-O,13.5X1.5 (Ref # 92055B)	92055-0944	2
PLUG,PT1/2X12.5 (Ref # 92066)	92066-0002	3
BOLT,FLANGED,9X138 (Ref # 92154)	92154-2732	6
BOLT,FLANGED,6X45 (Ref # 92154A)	92154-3737	12
CLAMP,58MM (Ref # 92173)	92173-0927	2
WASHER,10.5X19X2.3 (Ref # 92200)	92200-0363	6
BOLT-SOCKET,6X90 (Ref # 120)	120CC0690	2
WASHER-PLAIN,6MM (Ref # 411)	411AA0600	2

© 2026 Kawasaki Motors Corp., U.S.A.