2023 Ninja 400

PARTS DIAGRAM

Accessory(Radiator Screen)

F2910A



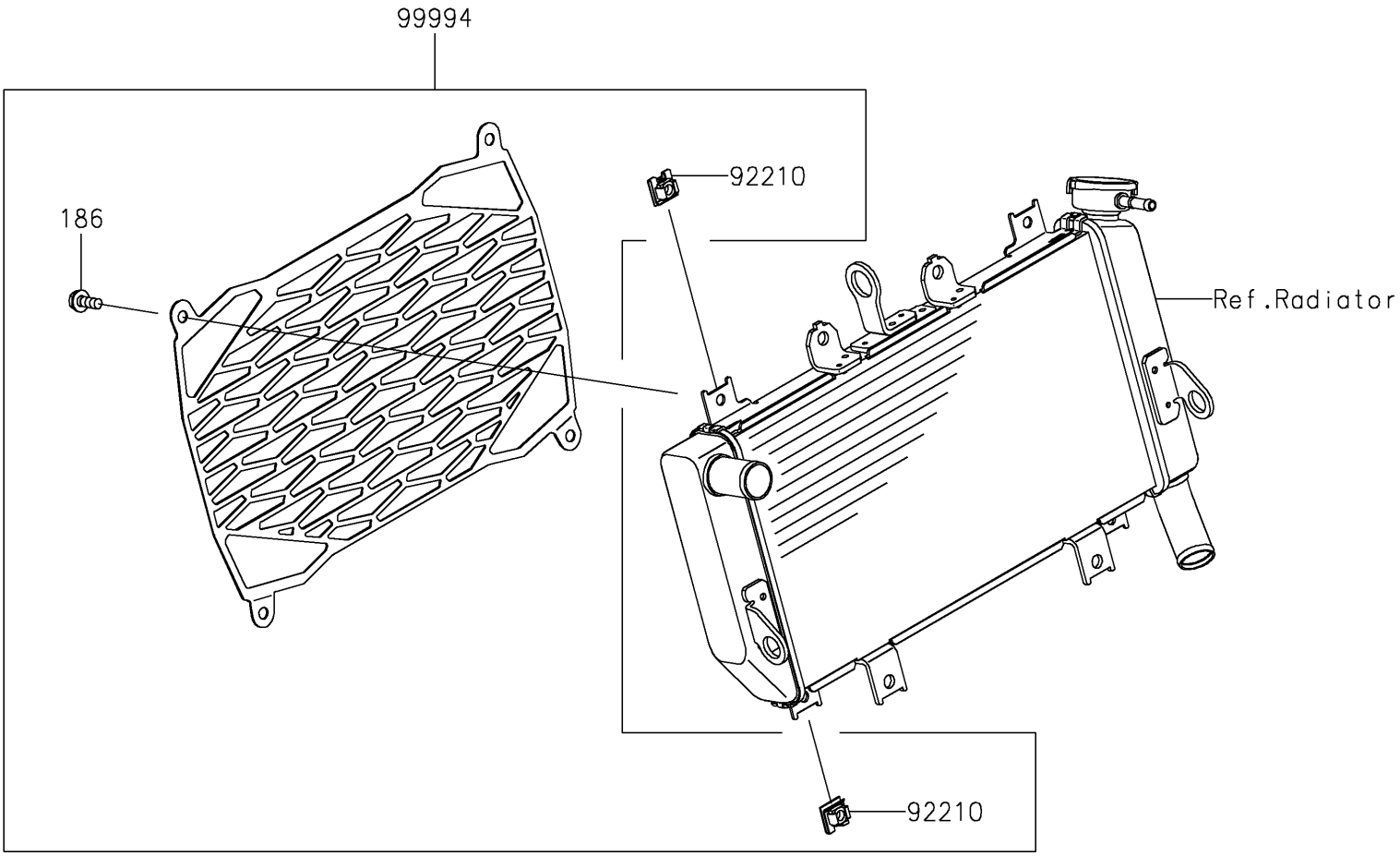

© 2026 Kawasaki Motors Corp., U.S.A.

2023 Ninja 400

PARTS LIST

Accessory(Radiator Screen)

ITEM NAME	PART NUMBER	QUANTITY

© 2026 Kawasaki Motors Corp., U.S.A.