2023 Ninja 400

PARTS DIAGRAM

Crankshaft

E1321

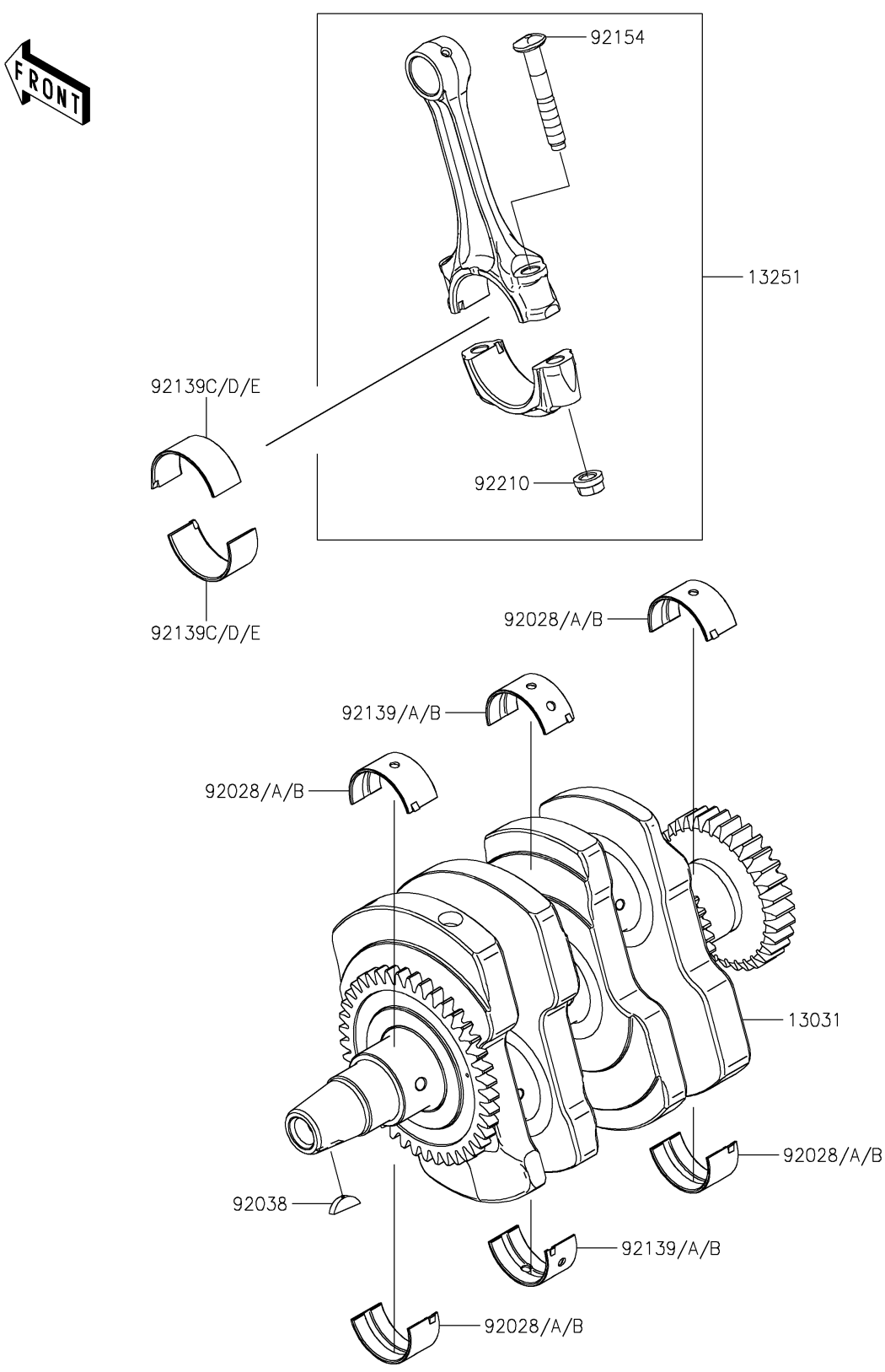

© 2026 Kawasaki Motors Corp., U.S.A.

2023 Ninja 400

PARTS LIST

Crankshaft

ITEM NAME	PART NUMBER	QUANTITY
CRANKSHAFT-COMP (Ref # 13031)	13031-0878	1
ROD-ASSY-CONNECTING,HH (Ref # 13251)	13251-0727-HH	2
BUSHING,CRANK,#1&#3,BLUE (Ref # 92028)	92028-1866	AR
BUSHING,CRANK,#1&#3,BLACK (Ref # 92028A)	92028-1867	4
BUSHING,CRANK,#1&#3,BROWN (Ref # 92028B)	92028-1868	AR
KEY,WOODRUFF (Ref # 92038)	92038-001	1
BUSHING,CRANK #2,BLUE (Ref # 92139)	92139-0880	AR
BUSHING,CRANK #2,BLACK (Ref # 92139A)	92139-0881	2
BUSHING,CRANK #2,BROWN (Ref # 92139B)	92139-0882	AR
BUSHING,CONNECTING ROD,BLUE (Ref # 92139C)	92139-0886	AR
BUSHING,CONNECTING ROD,BLACK (Ref # 92139D)	92139-0887	4
BUSHING,CONNECTING ROD,BROWN (Ref # 92139E)	92139-0888	AR
BOLT,7MM (Ref # 92154)	92154-7075	4
NUT,CONNECTING ROD,7MM (Ref # 92210)	92210-0384	4

© 2026 Kawasaki Motors Corp., U.S.A.