2023 Versys 1000 SE LT+

PARTS DIAGRAM

Accessory(Fog Lamp)

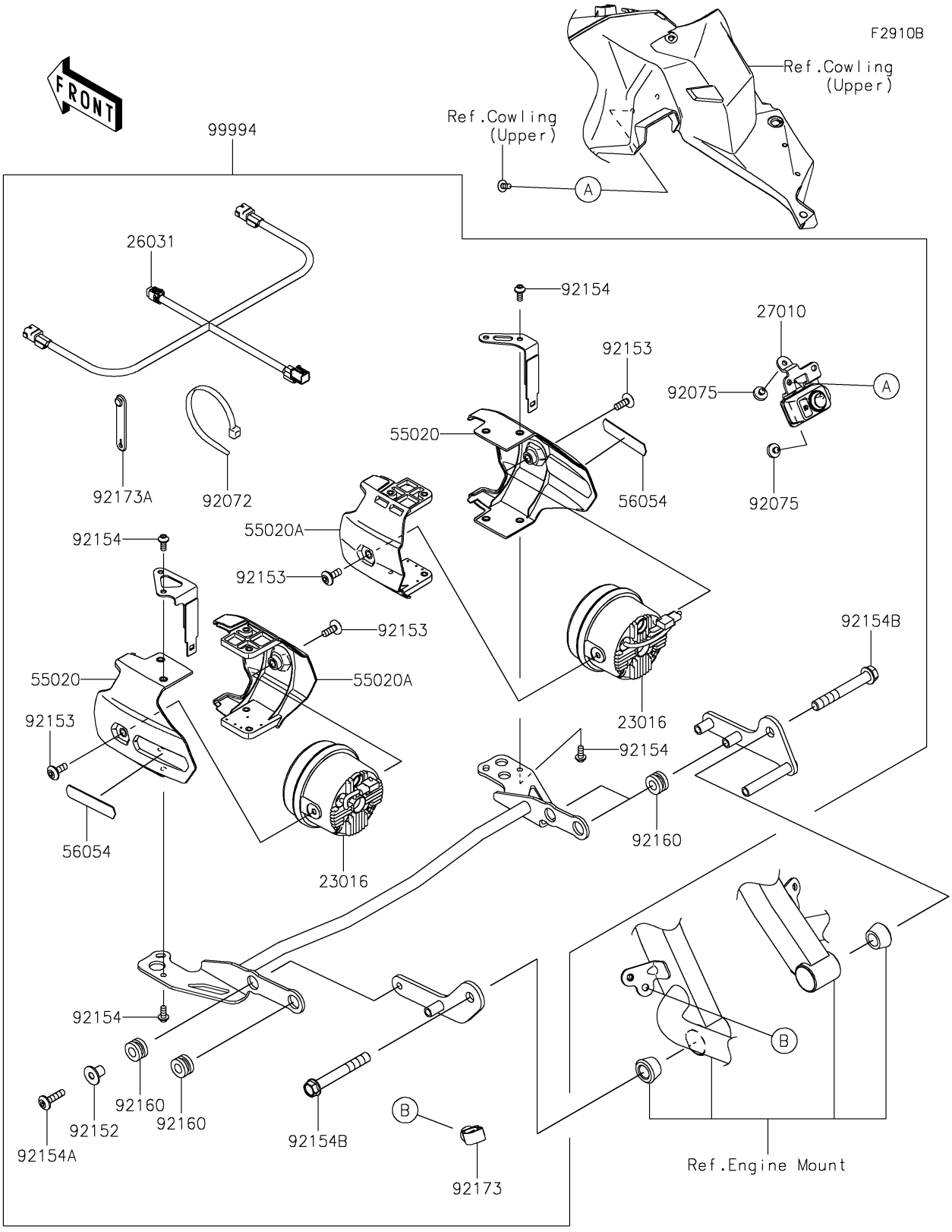

© 2026 Kawasaki Motors Corp., U.S.A.

2023 Versys 1000 SE LT+

PARTS LIST

Accessory(Fog Lamp)

ITEM NAME	PART NUMBER	QUANTITY
LAMP-ASSY,LED,FOG,PIAA (Ref # 23016)	23016-0599	2
HARNESS,FOG LAMP (Ref # 26031)	26031-2644	1
SWITCH,FOG LAMP (Ref # 27010)	27010-0891	1
GUARD,OUTER (Ref # 55020)	55020-1825	2
GUARD,INNER (Ref # 55020A)	55020-1826	2
MARK,FOG LAMP,KAWASAKI (Ref # 56054)	56054-1695	2
BAND (Ref # 92072)	92072-3851	2
DAMPER,BOOST SENSOR (Ref # 92075)	92075-2113	2
COLLAR (Ref # 92152)	92152-0667	1
BOLT,SOCKET,6X16 (Ref # 92153)	92153-1526	4
BOLT,SOCKET,5X12 (Ref # 92154)	92154-0917	8
BOLT,SOCKET,6X25 (Ref # 92154A)	92154-1532	1
BOLT,FLANGED,10X75 (Ref # 92154B)	92154-1923	2
DAMPER,10X20X12 (Ref # 92160)	92160-1167	4
CLAMP,12MM DIA. (Ref # 92173)	92173-0736	1
CLAMP (Ref # 92173A)	92173-1526	1
FOG LAMP (Ref # 99994)	99994-1138	1

© 2026 Kawasaki Motors Corp., U.S.A.