2021 NINJA® 400

PARTS DIAGRAM

Rear Fender(s)

F2172

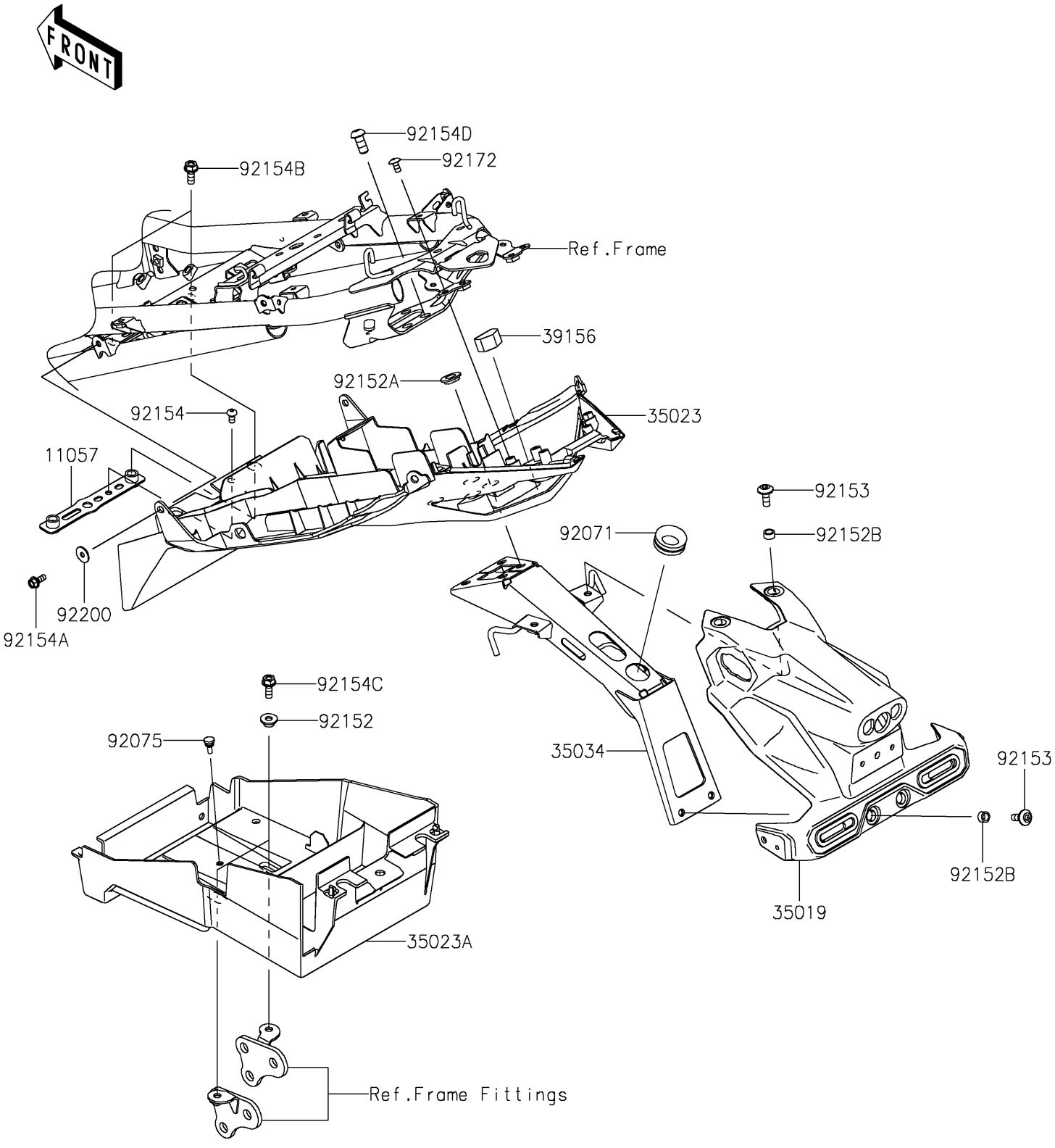

© 2026 Kawasaki Motors Corp., U.S.A.

2021 NINJA® 400

PARTS LIST

Rear Fender(s)

ITEM NAME	PART NUMBER	QUANTITY

© 2026 Kawasaki Motors Corp., U.S.A.