2021 NINJA® 400

PARTS DIAGRAM

Water Pipe

E3037

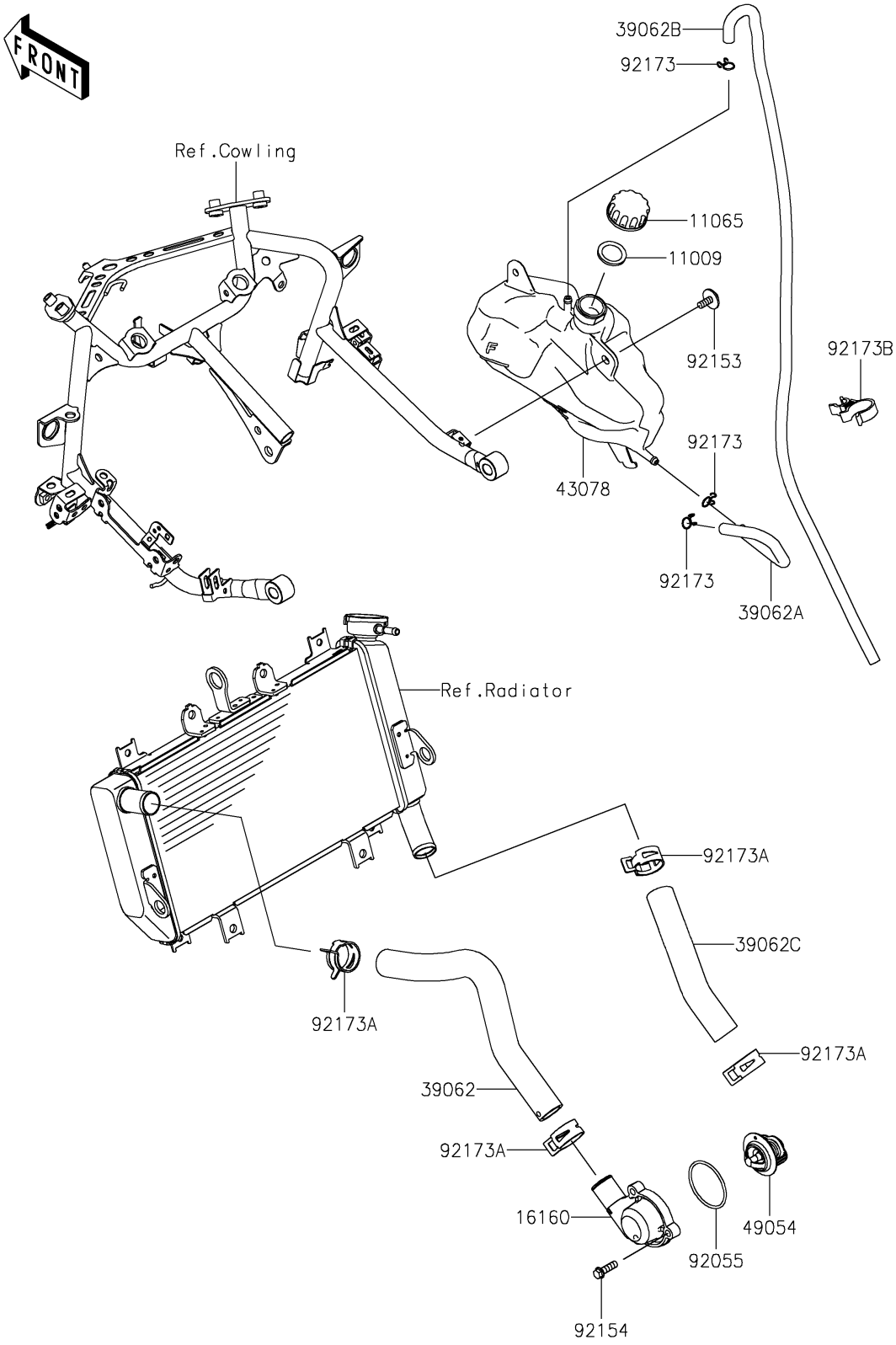

© 2026 Kawasaki Motors Corp., U.S.A.

2021 NINJA® 400

PARTS LIST

Water Pipe

ITEM NAME	PART NUMBER	QUANTITY
GASKET,RESERVOIR TANK CAP (Ref # 11009)	11009-1145	1
CAP (Ref # 11065)	11065-0969	1
BODY,THERMOSTAT (Ref # 16160)	16160-0830	1
HOSE-COOLING,THERMO.-RADIATOR (Ref # 39062)	39062-0781	1
HOSE-COOLING,RAD.-RESERVOIR (Ref # 39062A)	39062-0784	1
HOSE-COOLING,OVER FLOW (Ref # 39062B)	39062-0823	1
HOSE-COOLING,RADIATOR-W/PUMP (Ref # 39062C)	39062-0861	1
RESERVOIR (Ref # 43078)	43078-0600	1
THERMOSTAT (Ref # 49054)	49054-0001	1
RING-O,46.7X2.4 (Ref # 92055)	92055-0992	1
BOLT,FLANGED-SMALL,6X16 (Ref # 92153)	92153-1798	2
BOLT,FLANGED,6X20 (Ref # 92154)	92154-1778	3
CLAMP (Ref # 92173)	92173-0050	3
CLAMP (Ref # 92173A)	92173-1688	4
CLAMP (Ref # 92173B)	92173-1691	1

© 2026 Kawasaki Motors Corp., U.S.A.