2021 NINJA® 400 ABS

PARTS DIAGRAM

Engine Cover(s)

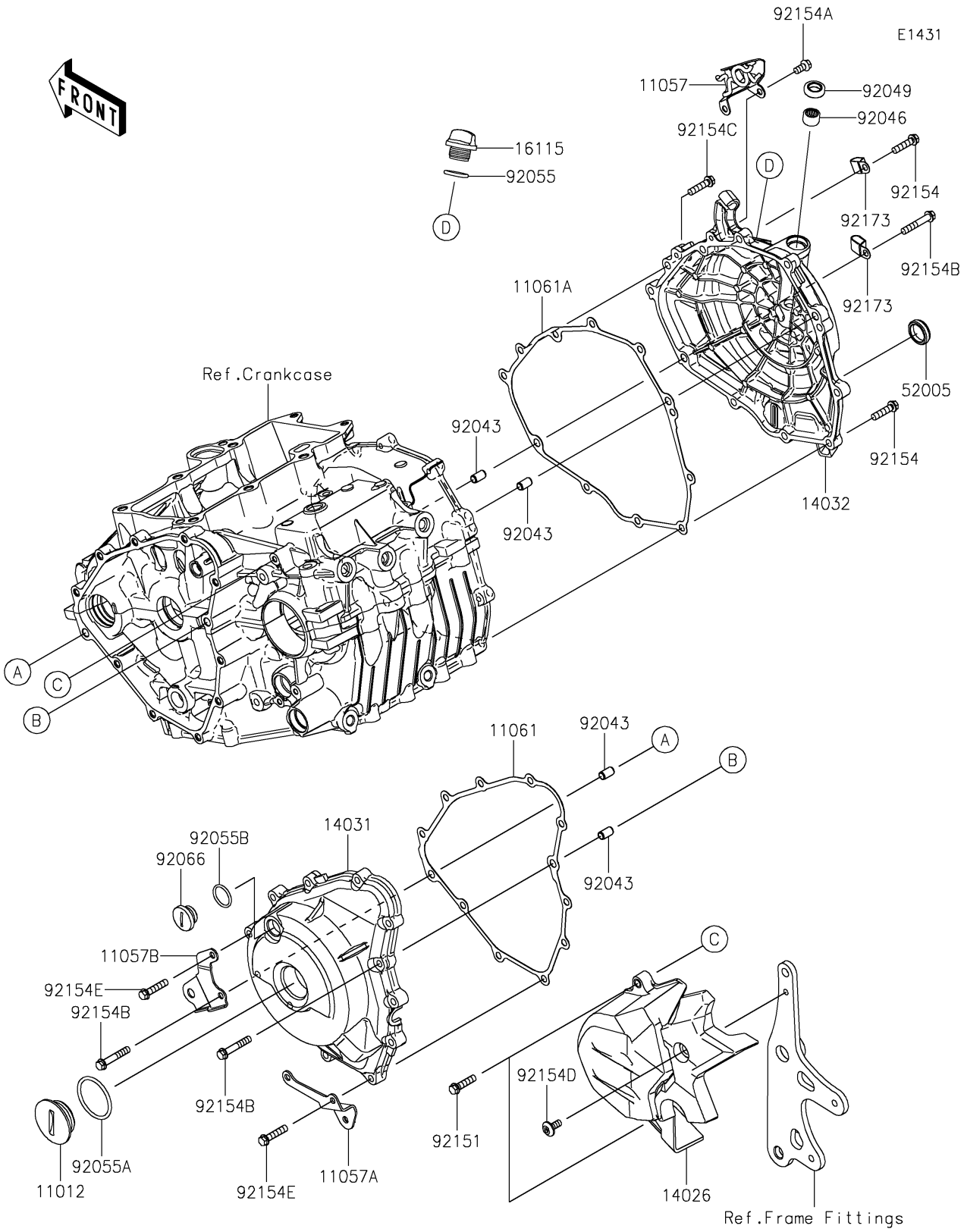

© 2026 Kawasaki Motors Corp., U.S.A.

2021 NINJA® 400 ABS

PARTS LIST

Engine Cover(s)

Kawasaki
Let the Good Times Roll®

ITEM NAME	PART NUMBER	QUANTITY
CAP (Ref # 11012)	11012-1362	1
BRACKET (Ref # 11057)	11057-1231	1
BRACKET (Ref # 11057A)	11057-1256	1
BRACKET (Ref # 11057B)	11057-1416	1
GASKET,GENERATOR COVER (Ref # 11061)	11061-1252	1
GASKET,CLUTCH COVER (Ref # 11061A)	11061-1253	1
COVER-CHAIN (Ref # 14026)	14026-0141	1
COVER-GENERATOR (Ref # 14031)	14031-0618	1
COVER-CLUTCH (Ref # 14032)	14032-0641	1
CAP-OIL FILLER (Ref # 16115)	16115-1053	1
GAUGE,OIL LEVEL (Ref # 52005)	52005-1009	1
PIN,6.2X8X14 (Ref # 92043)	92043-1263	4
BEARING-NEEDLE,HK1210FM (Ref # 92046)	92046-0034	1
SEAL-OIL (Ref # 92049)	92049-1560	1
RING-O (Ref # 92055)	92055-012	1
RING-O,39.4X3.1 (Ref # 92055A)	92055-0734	1
RING-O,20X2 (Ref # 92055B)	92055-1146	1
PLUG (Ref # 92066)	92066-0748	1
BOLT,FLANGED-SMALL,6X25 (Ref # 92151)	92151-1930	2
BOLT,FLANGED,6X25 (Ref # 92154)	92154-0819	9
BOLT,FLANGED,6X12 (Ref # 92154A)	92154-1777	2
BOLT,FLANGED,6X35 (Ref # 92154B)	92154-1779	3
BOLT,FLANGED,6X25 (Ref # 92154C)	92154-2734	1
BOLT,SOCKET,6X14 (Ref # 92154D)	92154-2735	1
BOLT,FLANGED,6X28 (Ref # 92154E)	92154-2788	10
CLAMP (Ref # 92173)	92173-1828	2

© 2026 Kawasaki Motors Corp., U.S.A.