2018 NINJA® 400 ABS

PARTS DIAGRAM

Ignition System

E1830

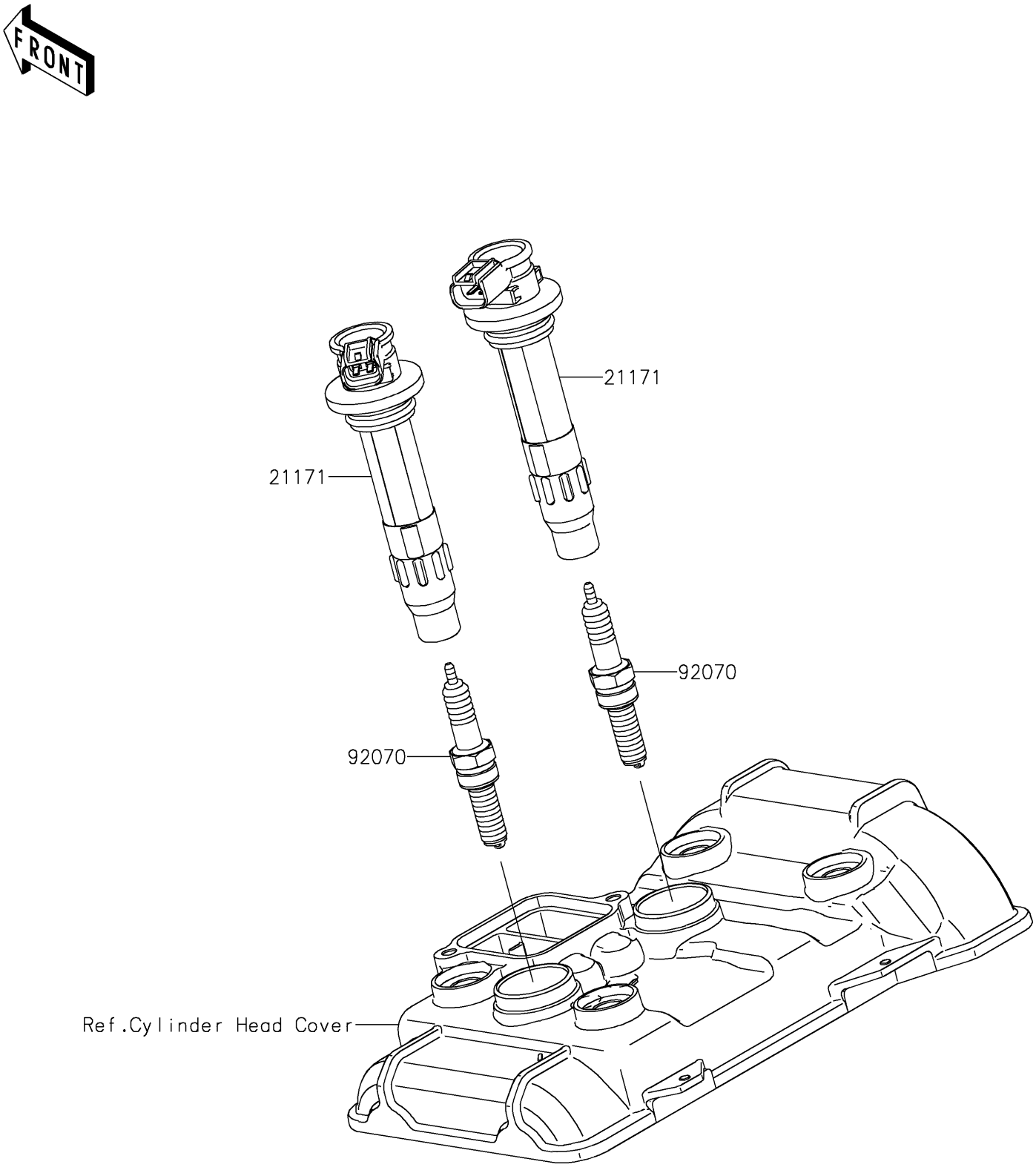

© 2026 Kawasaki Motors Corp., U.S.A.

2018 NINJA® 400 ABS

PARTS LIST

Ignition System

ITEM NAME	PART NUMBER	QUANTITY
COIL-ASSY-IGNITION (Ref # 21171)	21171-0751	0
PLUG-SPARK,LMAR9G(NGK) (Ref # 92070)	92070-0716	0

© 2026 Kawasaki Motors Corp., U.S.A.