2008 Concours 14 ABS

PARTS DIAGRAM

Brake Pedal/Torque Link

F2260

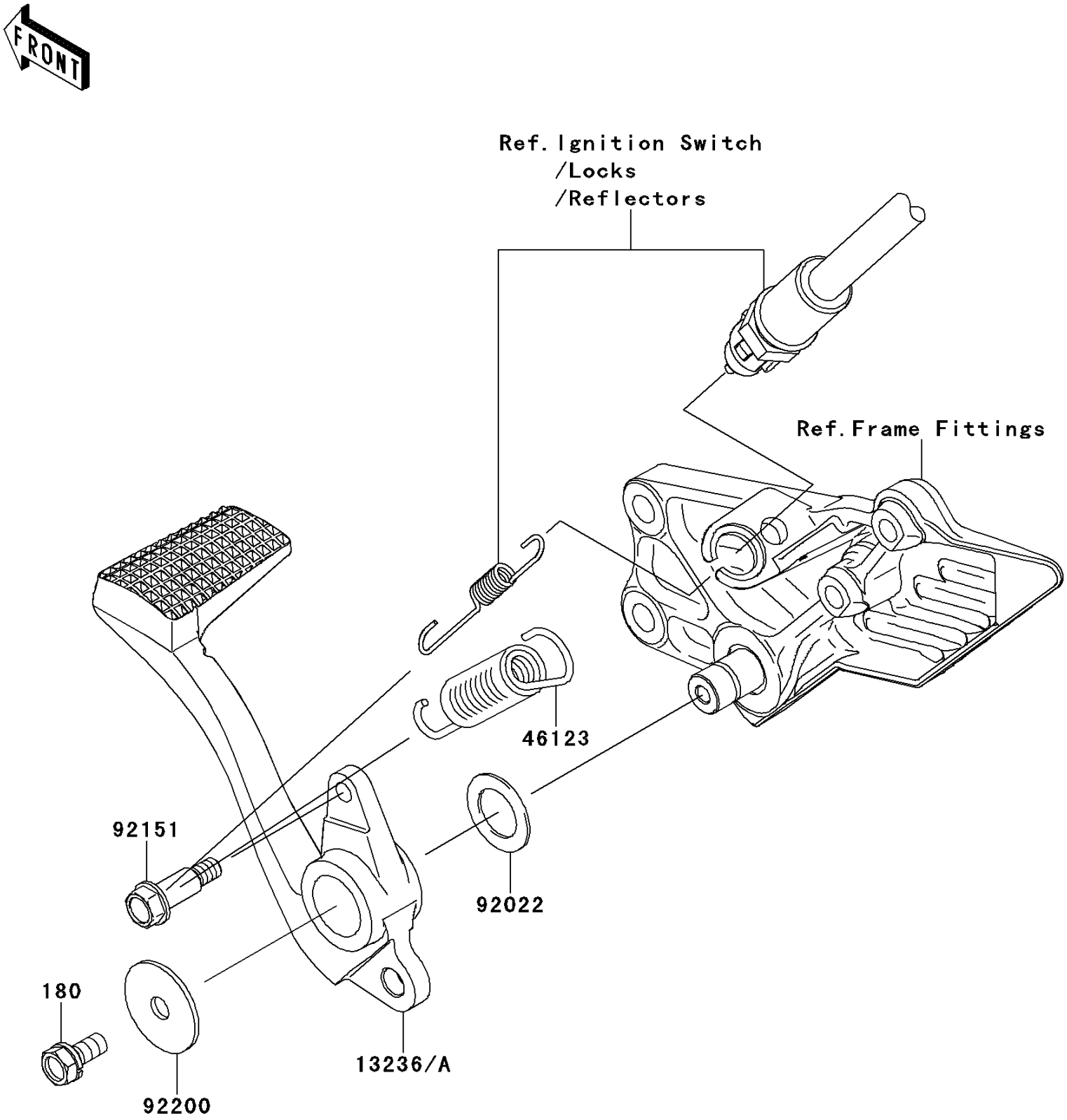

© 2026 Kawasaki Motors Corp., U.S.A.

2008 Concours 14 ABS

PARTS LIST

Brake Pedal/Torque Link

ITEM NAME	PART NUMBER	QUANTITY
BOLT-UPSET-WS,6X14 (Ref # 180)	180BA0614	1
LEVER-COMP,BRAKE PEDAL (Ref # 13236)	13236-0121	1
SPRING-COMP,BRAKE PEDAL RETURN (Ref # 46123)	46123-0006	1
WASHER,15.3X24X1 (Ref # 92022)	92022-326	1
BOLT,6MM (Ref # 92151)	92151-1295	1
WASHER,7X28X1.6 (Ref # 92200)	92200-0279	1

© 2026 Kawasaki Motors Corp., U.S.A.