2008 Concours 14 ABS

PARTS DIAGRAM

Fuel Injection

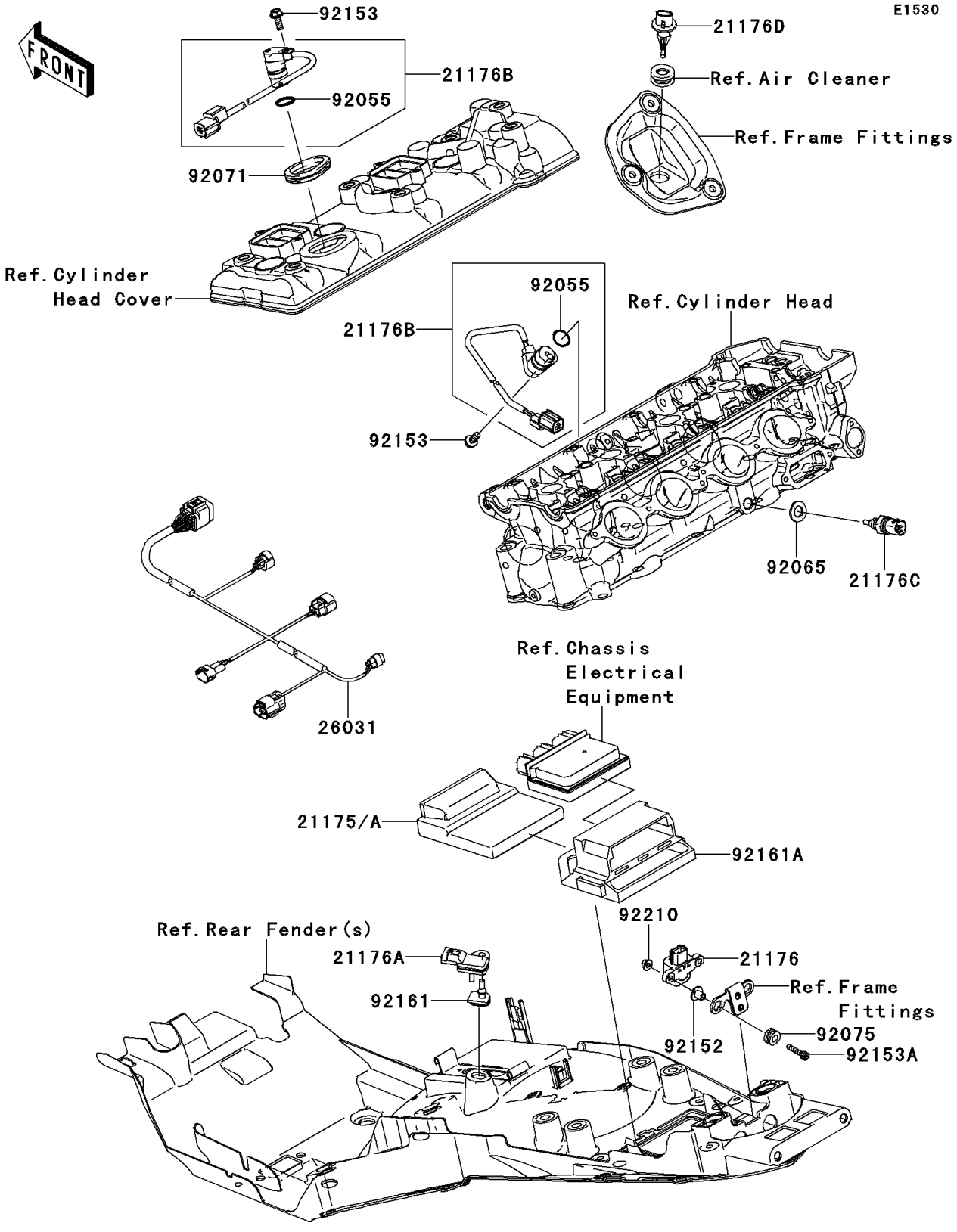

© 2026 Kawasaki Motors Corp., U.S.A.

2008 Concours 14 ABS

PARTS LIST

Fuel Injection

ITEM NAME	PART NUMBER	QUANTITY
SENSOR,VEHICLE-DOWN (Ref # 21176)	21176-0026	1
SENSOR,PRESSURE (Ref # 21176A)	21176-0058	1
SENSOR,CAM (Ref # 21176B)	21176-0064	2
SENSOR,WATER TEMP (Ref # 21176C)	21176-1120	1
SENSOR,AIR TEMP (Ref # 21176D)	21176-2106	1
HARNESS (Ref # 26031)	26031-0557	1
RING-O (Ref # 92055)	92055-1639	2
GASKET,12X22X2 (Ref # 92065)	92065-097	1
GROMMET (Ref # 92071)	92071-0028	1
DAMPER (Ref # 92075)	92075-1912	2
COLLAR (Ref # 92152)	92152-0329	2
BOLT-FLANGED,6X16 (Ref # 92153)	92153-1584	2
BOLT,SOCKET,5X22 (Ref # 92153A)	92153-1597	2
DAMPER (Ref # 92161)	92161-0041	1
DAMPER (Ref # 92161A)	92161-0092	1
NUT,FLANGED,5MM (Ref # 92210)	92210-0007	2
CONTROL UNIT-ELECTRONIC (Ref # 21175)	21175-0131	1
CONTROL UNIT-ELECTRONIC (Ref # 21175A)	21175-0132	1

© 2026 Kawasaki Motors Corp., U.S.A.