2008 Concours 14 ABS

PARTS DIAGRAM

Gear Change Drum/Shift Fork(s)

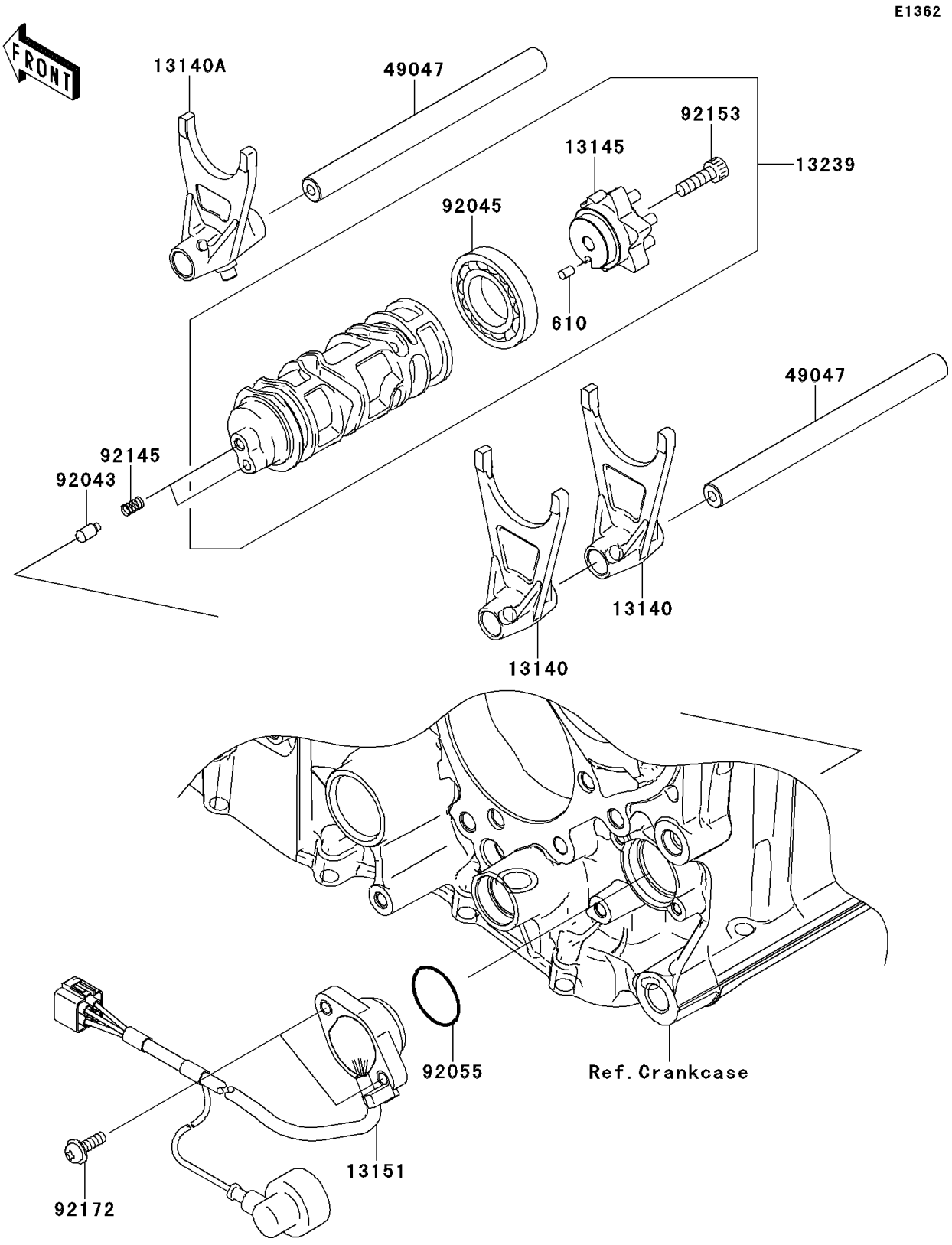

© 2026 Kawasaki Motors Corp., U.S.A.

2008 Concours 14 ABS

PARTS LIST

Gear Change Drum/Shift Fork(s)

ITEM NAME	PART NUMBER	QUANTITY
ROLLER,4X6 (Ref # 610)	610A0406	1
FORK-SHIFT,OUTPUT (Ref # 13140)	13140-0030	2
FORK-SHIFT,INPUT (Ref # 13140A)	13140-0046	1
CAM-CHANGE DRUM (Ref # 13145)	13145-0023	1
SWITCH-COMP,NEUTRAL (Ref # 13151)	13151-0031	1
DRUM-ASSY-CHANGE (Ref # 13239)	13239-0023	1
ROD-SHIFT (Ref # 49047)	49047-0023	2
PIN (Ref # 92043)	92043-1654	2
BEARING-BALL,16005 (Ref # 92045)	92045-1045	1
RING-O,27.7X2.4 (Ref # 92055)	92055-091	1
SPRING (Ref # 92145)	92145-1414	2
BOLT,SOCKET,6X20 (Ref # 92153)	92153-1031	1
SCREW-PAN-WS-CROS,5X16 (Ref # 92172)	92172-0270	2

© 2026 Kawasaki Motors Corp., U.S.A.