2023 Z900 SE

PARTS DIAGRAM

Suspension/Shock Absorber

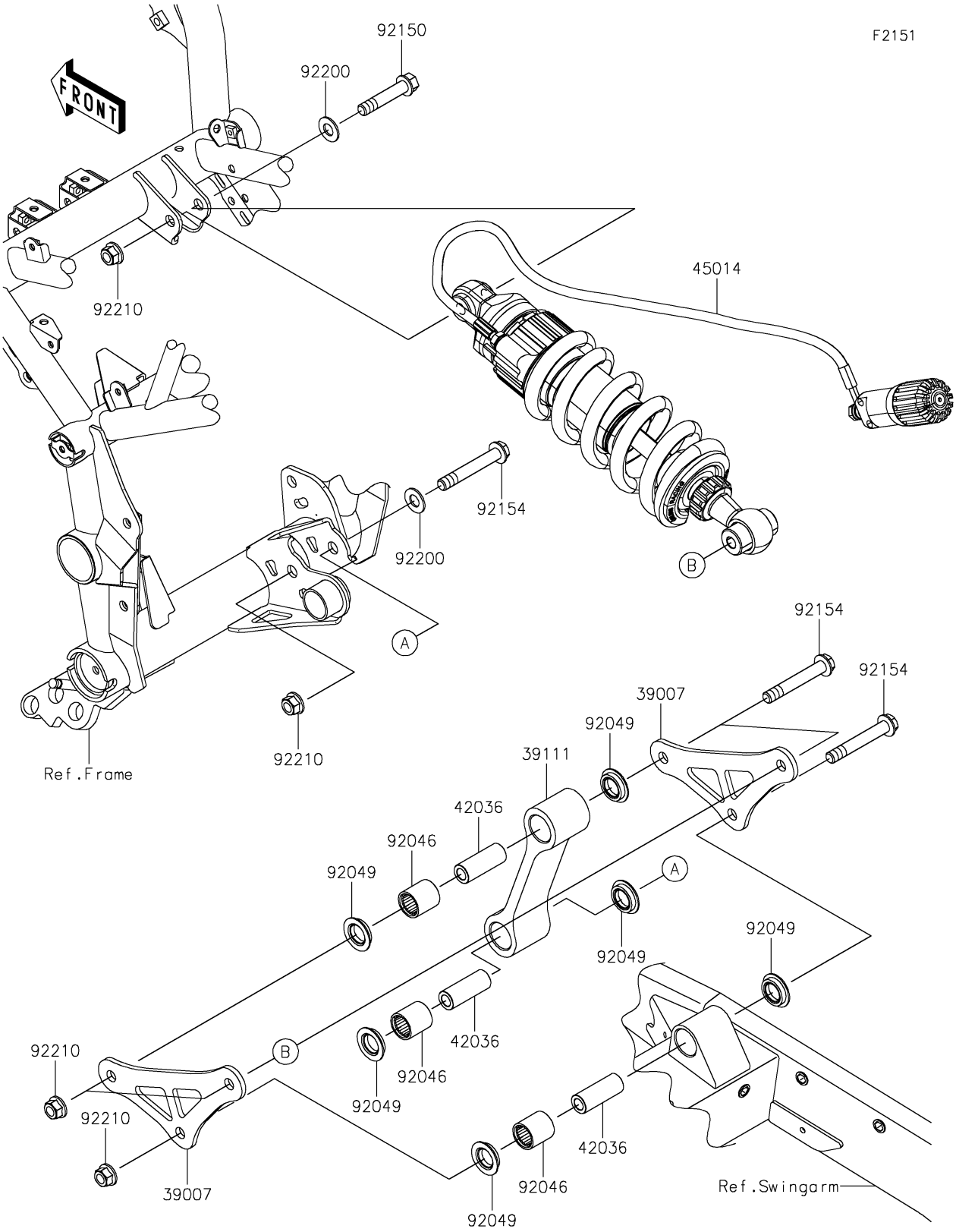

© 2026 Kawasaki Motors Corp., U.S.A.

2023 Z900 SE

PARTS LIST

Suspension/Shock Absorber

ITEM NAME	PART NUMBER	QUANTITY
ARM-SUSP (Ref # 39007)	39007-0403	2
ROD-TIE (Ref # 39111)	39111-0370	1
SLEEVE,10.1X17X44.5 (Ref # 42036)	42036-1342	3
SHOCKABSORBER,OHLINS (Ref # 45014)	45014-0733	1
BEARING-NEEDLE,SFYZM172425 (Ref # 92046)	92046-1273	3
SEAL-OIL,MHA17245.7F (Ref # 92049)	92049-1223	6
BOLT,FLANGED,10X50 (Ref # 92150)	92150-1125	1
BOLT,FLANGED,10X66 (Ref # 92154)	92154-2204	4
WASHER,11X22X1.6 (Ref # 92200)	92200-1836	2
NUT,LOCK,FLANGED,10MM (Ref # 92210)	92210-1139	5

© 2026 Kawasaki Motors Corp., U.S.A.