1996 Voyager XII

PARTS DIAGRAM

Fenders

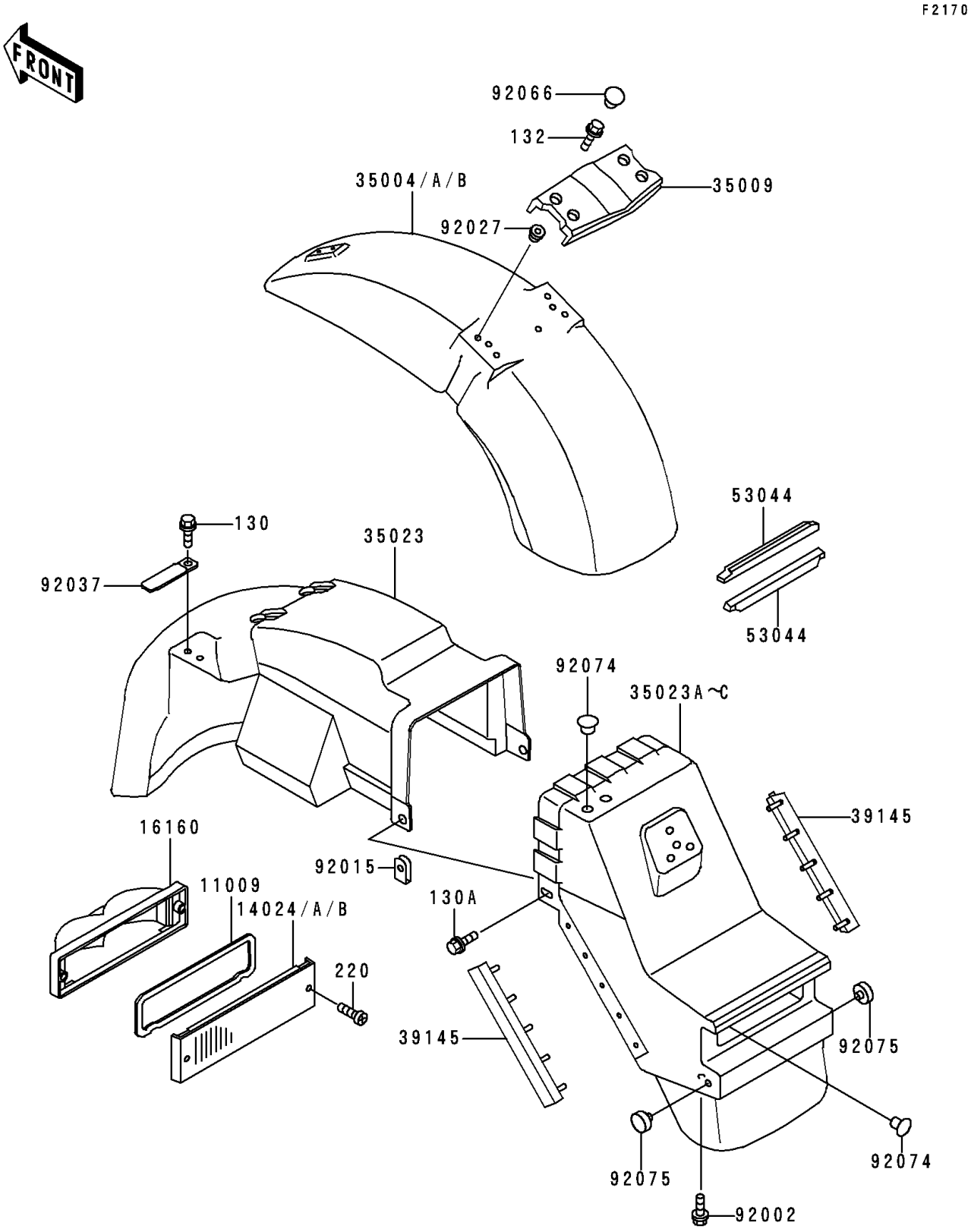

© 2026 Kawasaki Motors Corp., U.S.A.

1996 Voyager XII

PARTS LIST

Fenders

ITEM NAME	PART NUMBER	QUANTITY
BOLT-FLANGED (Ref # 130)	130B0614	2
BOLT-FLANGED,6X20 (Ref # 130A)	130B0620	2
BOLT-FLANGED-SMALL (Ref # 132)	132G0835	4
SCREW-PAN-CROS,5X25 (Ref # 220)	220B0525	2
GASKET,TAIL LAMP LENS (Ref # 11009)	11009-1582	1
COVER,TAIL ACCESSORY,RED/RED (Ref # 14024)	14024-1680-L1	1
BODY,TAIL ACCESSORY (Ref # 16160)	16160-1148	1
FENDER-FRONT,C,C,RED (Ref # 35004)	35004-1180-HR	1
BRACE,FRONT FENDER (Ref # 35009)	35009-1103	1
FENDER-REAR,FR (Ref # 35023)	35023-1148	1
FENDER-REAR,RR,C,C,RED (Ref # 35023A)	35023-1149-HR	1
TRIM-SEAL,REAR FENDER (Ref # 39145)	39145-1070	2
TRIM,REAR FENDER (Ref # 53044)	53044-1183	2
BOLT,6X20 (Ref # 92002)	92002-1246	2
NUT (Ref # 92015)	92015-1248	2
COLLAR (Ref # 92027)	92027-1745	4
CLAMP,WIRING HARNESS,L=60 (Ref # 92037)	92037-1069	1
PLUG,18.3X4.5 (Ref # 92066)	92066-1234	4
PLUG,11X3.2 (Ref # 92074)	92074-038	2
DAMPER (Ref # 92075)	92075-005	2

© 2026 Kawasaki Motors Corp., U.S.A.