2024 Z900 ABS

PARTS DIAGRAM

Clutch

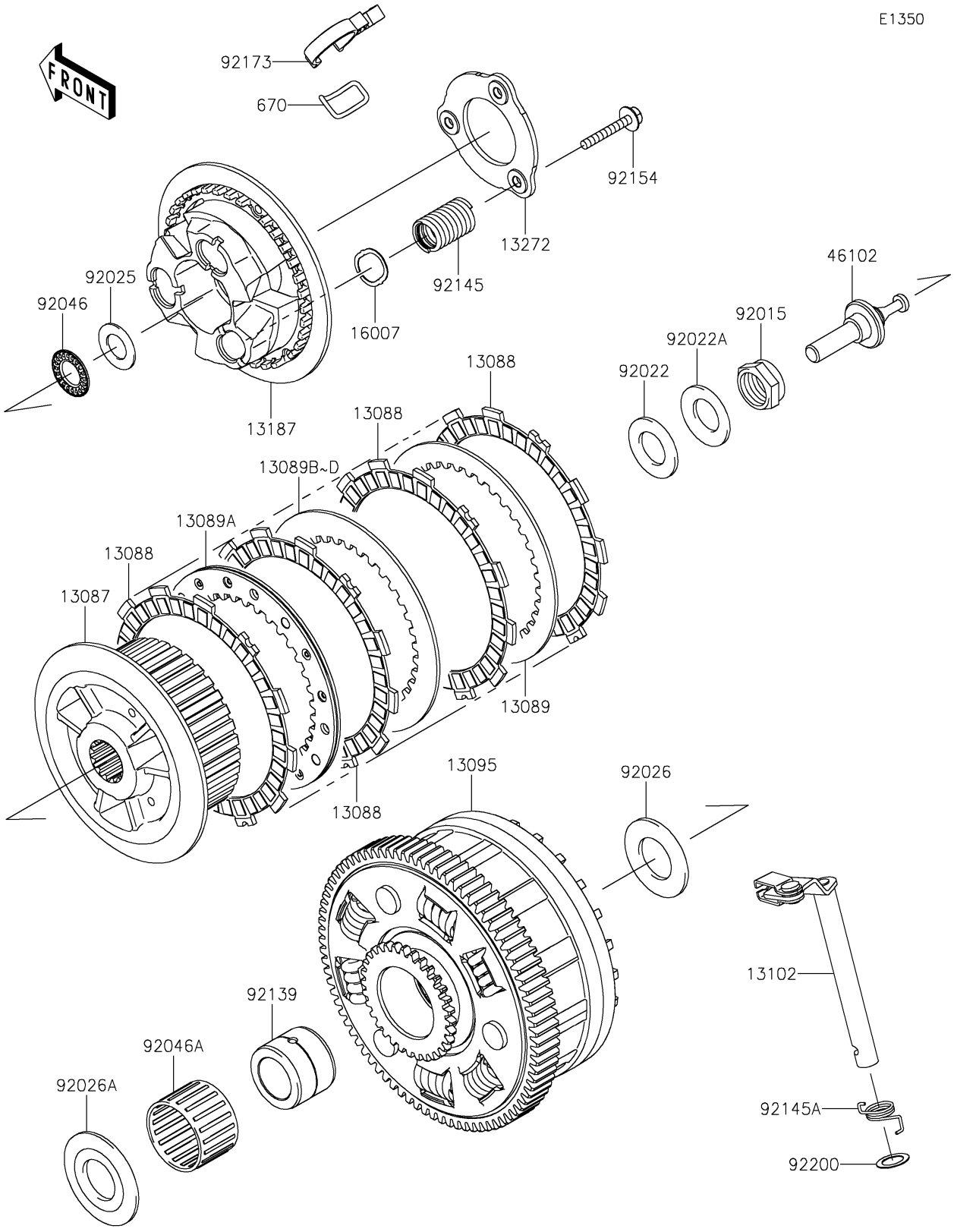

© 2026 Kawasaki Motors Corp., U.S.A.

2024 Z900 ABS

PARTS LIST

Clutch

ITEM NAME	PART NUMBER	QUANTITY
HUB-CLUTCH (Ref # 13087)	13087-0583	1
PLATE-FRICTION (Ref # 13088)	13088-0568	9
PLATE-CLUTCH,T=2.3 (Ref # 13089)	13089-0023	1
PLATE-CLUTCH,SPG COMP (Ref # 13089A)	13089-0024	1
PLATE-CLUTCH,T=2.0 (Ref # 13089B)	13089-1073	AR
PLATE-CLUTCH,T=2.3 (Ref # 13089C)	13089-1084	6
PLATE-CLUTCH,T=2.6 (Ref # 13089D)	13089-1115	AR
HOUSING-COMP-CLUTCH (Ref # 13095)	13095-0598	1
RELEASE-COMP-CLUTCH (Ref # 13102)	13102-0075	1
PLATE-CLUTCH OPERATING (Ref # 13187)	13187-0031	1
PLATE (Ref # 13272)	13272-1413	1
SEAT-SPRING (Ref # 16007)	16007-0711	3
ROD (Ref # 46102)	46102-0621	1
NUT,20MM (Ref # 92015)	92015-1555	1
WASHER,20.3X36X2.3 (Ref # 92022)	92022-1116	1
WASHER,20.3X36X3.7 (Ref # 92022A)	92022-1868	1
SHIM,15.3X27.5X1.20 (Ref # 92025)	92025-1137	1
SPACER,25.5X47X2.5 (Ref # 92026)	92026-022	1
SPACER (Ref # 92026A)	92026-1497	1
BEARING-NEEDLE,AXK1102 (Ref # 92046)	92046-1052	1
BEARING-NEEDLE,K38X43X28.8X (Ref # 92046A)	92046-1263	1
BUSHING,25X38X29.05 (Ref # 92139)	92139-0067	1
SPRING (Ref # 92145)	92145-1745	3
SPRING,RELEASE-COMP (Ref # 92145A)	92145-1769	1
BOLT,FLANGED,6X35 (Ref # 92154)	92154-1116	3
CLAMP (Ref # 92173)	92173-1724	1
WASHER,12X18.5X0.5 (Ref # 92200)	92200-1487	1
O RING,22MM (Ref # 670)	670E2022	1

© 2026 Kawasaki Motors Corp., U.S.A.