2023 Versys-X 300

PARTS DIAGRAM

Headlight(s)

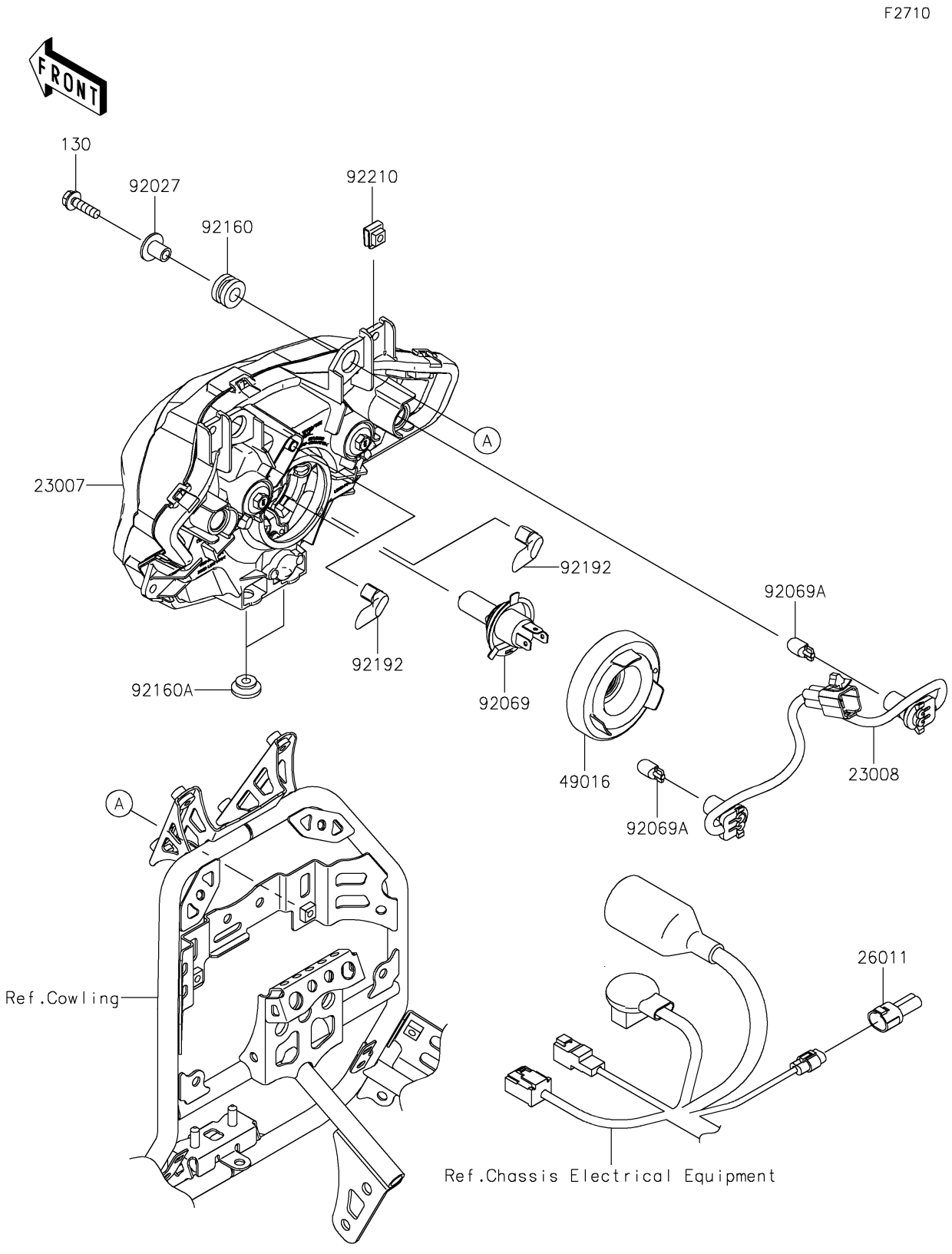

© 2026 Kawasaki Motors Corp., U.S.A.

2023 Versys-X 300

PARTS LIST

Headlight(s)

ITEM NAME	PART NUMBER	QUANTITY
LENS-COMP,HEAD LAMP (Ref # 23007)	23007-0207	1
SOCKET-ASSY (Ref # 23008)	23008-0177	1
WIRE-LEAD (Ref # 26011)	26011-0967	1
COVER-SEAL (Ref # 49016)	49016-0627	1
COLLAR,6.5X10X14.1 (Ref # 92027)	92027-1183	2
BULB,12V 60/55W,H4 (Ref # 92069)	92069-0050	1
BULB,12V 5W (Ref # 92069A)	92069-1016	2
DAMPER,10X20X12 (Ref # 92160)	92160-1167	2
DAMPER (Ref # 92160A)	92160-1613	2
TUBE,BREATHER (Ref # 92192)	92192-1528	2
NUT,5MM (Ref # 92210)	92210-0776	2
BOLT-FLANGED,6X22 (Ref # 130)	130BA0622	2

© 2026 Kawasaki Motors Corp., U.S.A.