2023 Versys-X 300

PARTS DIAGRAM

Seat

F2510

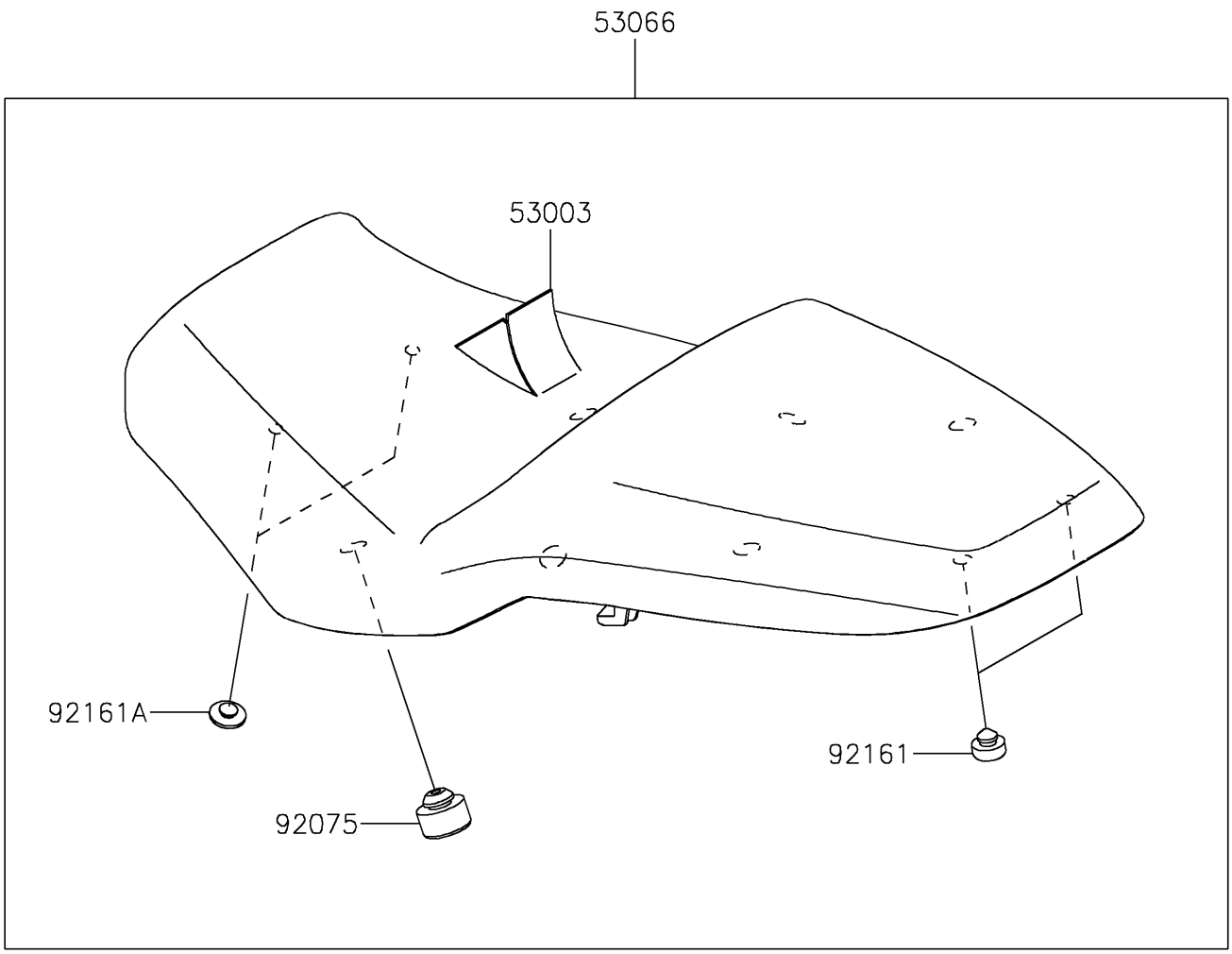

© 2026 Kawasaki Motors Corp., U.S.A.

2023 Versys-X 300

PARTS LIST

Seat

ITEM NAME	PART NUMBER	QUANTITY
LEATHER,BLACK (Ref # 53003)	53003-0439-MA	1
SEAT-ASSY,BLACK (Ref # 53066)	53066-0547-MA	1
DAMPER (Ref # 92075)	92075-015	6
DAMPER,10X20X8 (Ref # 92161)	92161-0855	2
DAMPER,8X22X10 (Ref # 92161A)	92161-1685	2

© 2026 Kawasaki Motors Corp., U.S.A.