2023 Versys-X 300

PARTS DIAGRAM

Brake Pedal

F2260

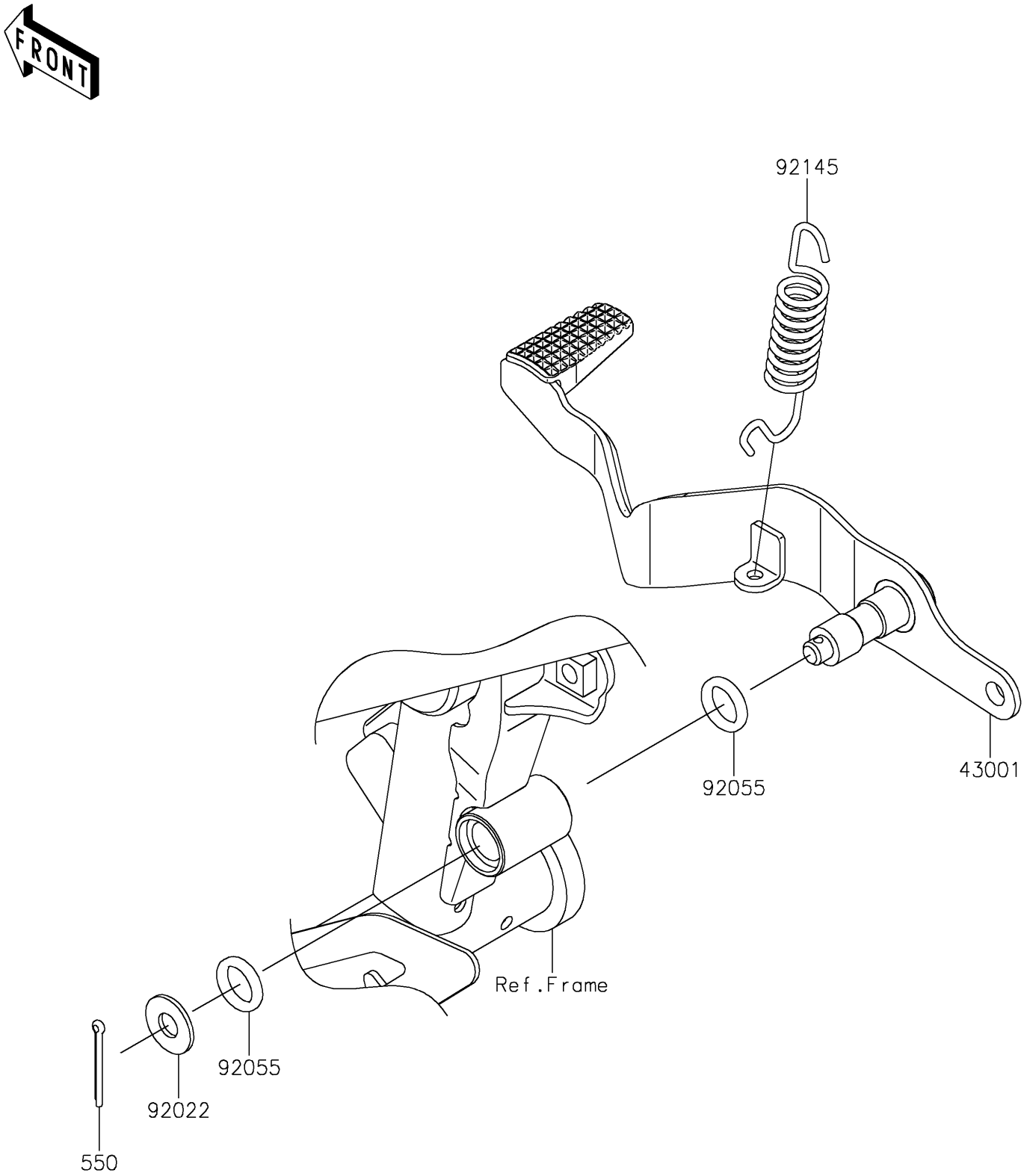

© 2026 Kawasaki Motors Corp., U.S.A.

2023 Versys-X 300

PARTS LIST

Brake Pedal

ITEM NAME	PART NUMBER	QUANTITY
LEVER-BRAKE,PEDAL (Ref # 43001)	43001-0750	1
WASHER,8.5X20X1.6 (Ref # 92022)	92022-1561	1
RING-O,OD=18.5 (Ref # 92055)	92055-0168	2
SPRING,BRAKE PEDAL RETURN (Ref # 92145)	92145-0230	1
PIN-COTTER,2.5X25 (Ref # 550)	550AA2525	1

© 2026 Kawasaki Motors Corp., U.S.A.