2022 Z125 PRO

PARTS DIAGRAM

Crankcase

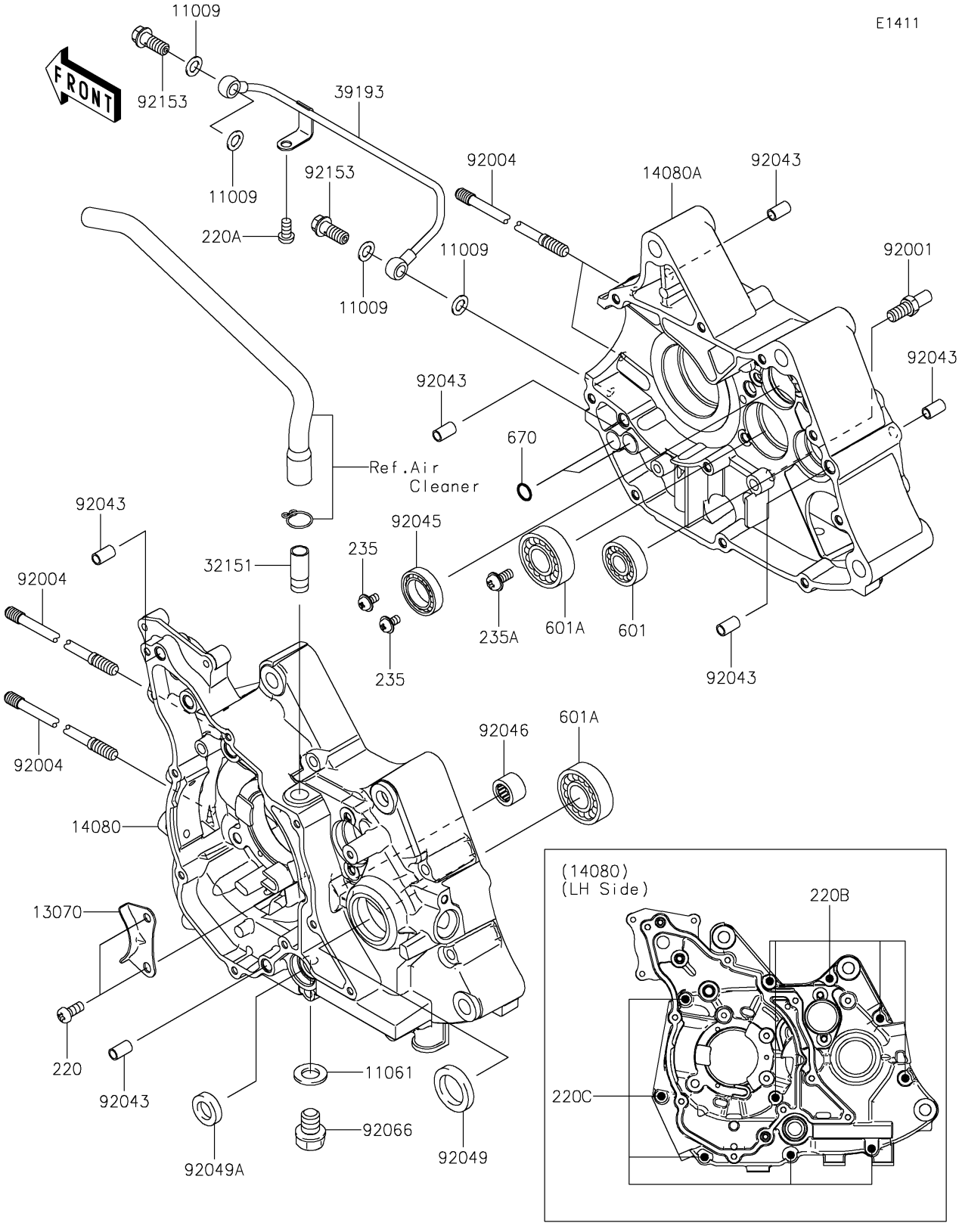

© 2026 Kawasaki Motors Corp., U.S.A.

2022 Z125 PRO

PARTS LIST

Crankcase

ITEM NAME	PART NUMBER	QUANTITY
GASKET,8.2X14X1.0 (Ref # 11009)	11009-1344	4
GASKET,DRAIN PLUG (Ref # 11061)	11061-0421	1
GUIDE (Ref # 13070)	13070-0069	1
CRANKCASE,LH (Ref # 14080)	14080-0747	1
CRANKCASE,RH (Ref # 14080A)	14080-0752	1
PIPE (Ref # 32151)	32151-1961	1
PIPE-OIL (Ref # 39193)	39193-1056	1
BOLT,RETURN SPRING (Ref # 92001)	92001-1455	1
STUD,8X190 (Ref # 92004)	92004-1281	4
PIN,6.2X8X14 (Ref # 92043)	92043-1263	6
BEARING-BALL,6804 (Ref # 92045)	92045-0758	1
BEARING-NEEDLE,HK1312 (Ref # 92046)	92046-1148	1
SEAL-OIL,SC22325 (Ref # 92049)	92049-1048	1
SEAL-OIL (Ref # 92049A)	92049-1559	1
PLUG,OIL DRAIN,12X15 (Ref # 92066)	92066-0753	1
BOLT,8X20 (Ref # 92153)	92153-0570	2
SCREW-PAN-CROS,6X14 (Ref # 220)	220AA0614	2
SCREW-PAN-CROS,6X12 (Ref # 220A)	220AC0612	1
SCREW-PAN-CROS,6X50 (Ref # 220B)	220AC0650	5
SCREW-PAN-CROS,6X75 (Ref # 220C)	220AC0675	5
SCREW-PAN-WP-CROS,5X10 (Ref # 235)	235AA0510	2
SCREW-PAN-WP-CROS,6X14 (Ref # 235A)	235AA0614	1
BEARING-BALL (Ref # 601)	601A6201	1
BEARING-BALL,#6203 (Ref # 601A)	601A6203	2
O RING,9.8X1.9 (Ref # 670)	670B1510	2

© 2026 Kawasaki Motors Corp., U.S.A.