2022 Z125 PRO

PARTS DIAGRAM

Clutch

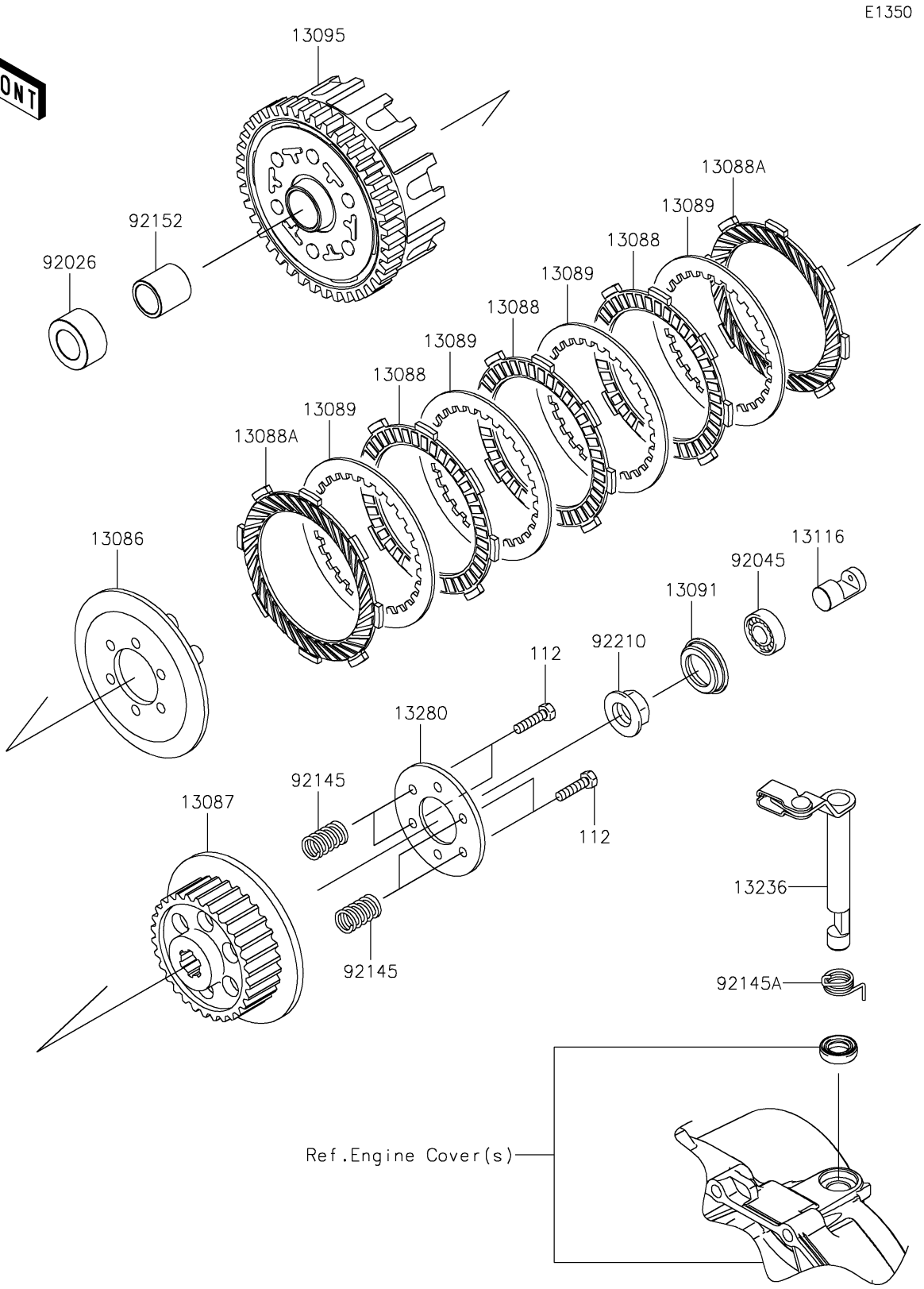

© 2026 Kawasaki Motors Corp., U.S.A.

2022 Z125 PRO

PARTS LIST

Clutch

ITEM NAME	PART NUMBER	QUANTITY

© 2026 Kawasaki Motors Corp., U.S.A.