2024 Z125 PRO

PARTS DIAGRAM

Cylinder/Piston(s)

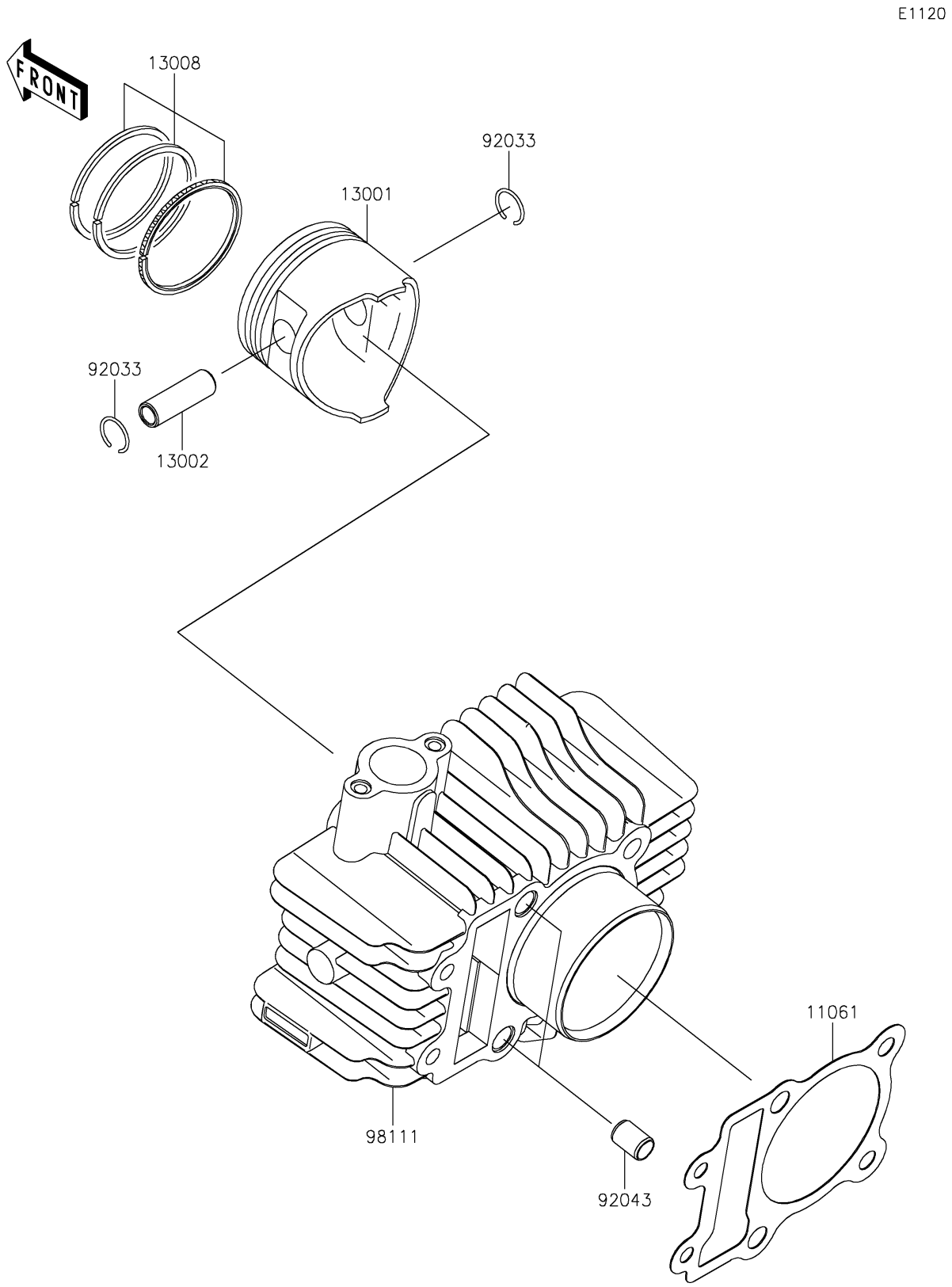

© 2026 Kawasaki Motors Corp., U.S.A.

2024 Z125 PRO

PARTS LIST

Cylinder/Piston(s)

ITEM NAME	PART NUMBER	QUANTITY
GASKET,CYLINDER BASE (Ref # 11061)	11061-0124	1
PISTON-ENGINE,STD (Ref # 13001)	13001-0772	1
PIN-PISTON (Ref # 13002)	13002-0031	1
RING-SET-PISTON,STD (Ref # 13008)	13008-0006	1
RING-SNAP (Ref # 92033)	92033-1072	2
PIN,8.2X10X14 (Ref # 92043)	92043-1264	2
CYLINDER-COMP-ENGINE (Ref # 98111)	98111-0043	1

© 2026 Kawasaki Motors Corp., U.S.A.