# 1996 Voyager XII

## PARTS DIAGRAM

### Crankshaft

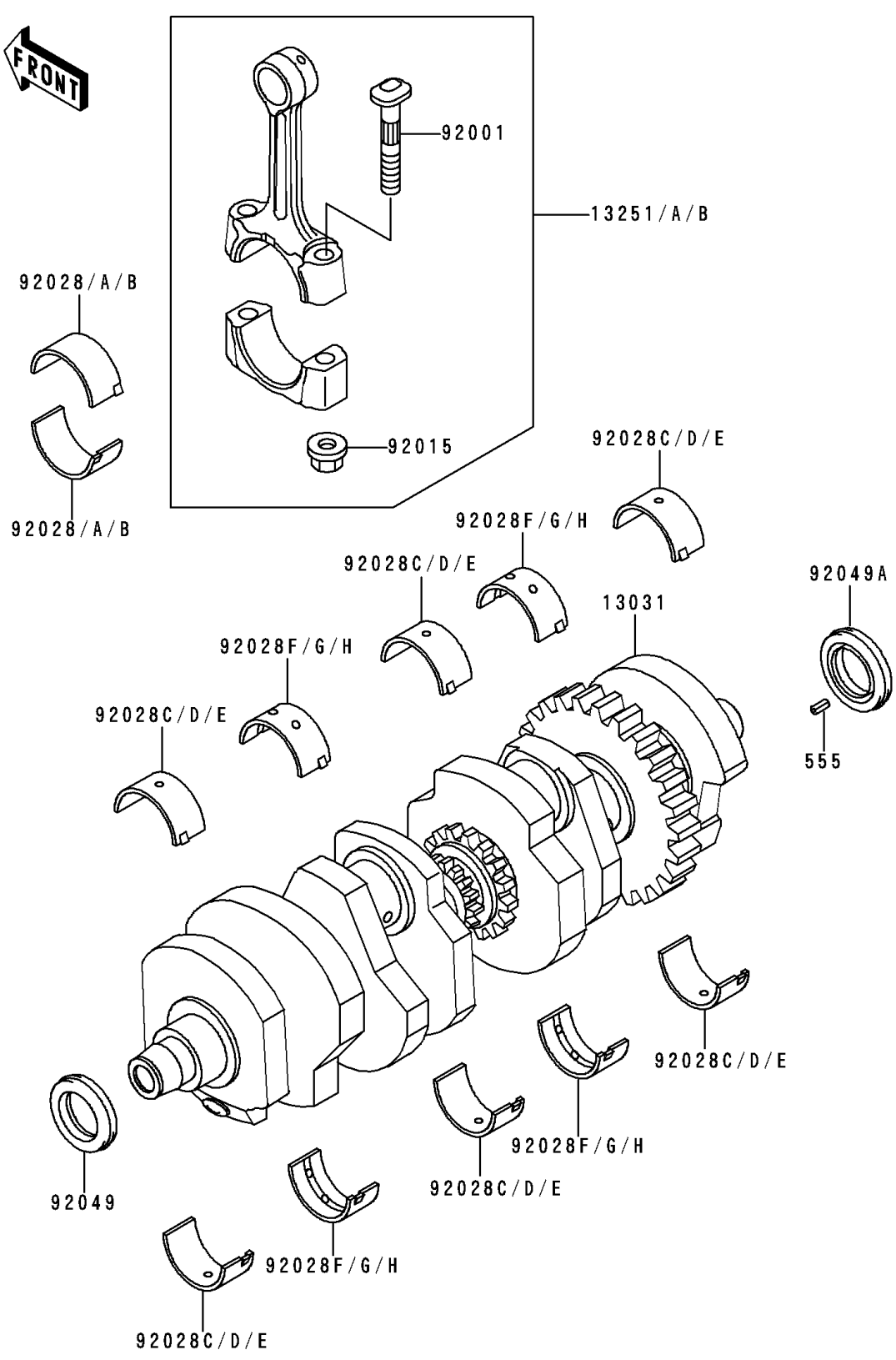


© 2026 Kawasaki Motors Corp., U.S.A.

# 1996 Voyager XII

## PARTS LIST

### Crankshaft

| ITEM NAME | PART NUMBER | QUANTITY |
|---|---|---|
| PIN-SPRING,4X8 (Ref # 555) | 555A0408 | 1 |
| CRANKSHAFT-COMP (Ref # 13031) | 13031-1338 | 1 |
| ROD-ASSY-CONNECTING,H (Ref # 13251) | 13251-1070-HH | 4 |
| ROD-ASSY-CONNECTING,I (Ref # 13251A) | 13251-1070-II | 4 |
| ROD-ASSY-CONNECTING,J (Ref # 13251B) | 13251-1070-JJ | 4 |
| BOLT,CONNECTING ROD (Ref # 92001) | 92001-1980 | 8 |
| NUT,FLANGED,8MM (Ref # 92015) | 92015-1311 | 8 |
| BUSHING,CONNECTING ROD,BLUE (Ref # 92028) | 92028-1394 | AR |
| BUSHING,CONNECTING ROD,BLACK (Ref # 92028A) | 92028-1395 | AR |
| BUSHING,CONNECTING ROD,BROWN (Ref # 92028B) | 92028-1396 | AR |
| BUSHING,CRANKSHAFT,BLUE (Ref # 92028C) | 92028-1455 | AR |
| BUSHING,CRANKSHAFT,BLACK (Ref # 92028D) | 92028-1456 | AR |
| BUSHING,CRANKSHAFT,BROWN (Ref # 92028E) | 92028-1457 | AR |
| BUSHING,CRANKSHAFT,BLUE (Ref # 92028F) | 92028-1458 | AR |
| BUSHING,CRANKSHAFT,BLACK (Ref # 92028G) | 92028-1459 | AR |
| BUSHING,CRANKSHAFT,BROWN (Ref # 92028H) | 92028-1460 | AR |
| SEAL-OIL,HSCY28417 (Ref # 92049) | 92049-1246 | 1 |
| SEAL-OIL,HSCY25417 (Ref # 92049A) | 92049-1247 | 1 |

© 2026 Kawasaki Motors Corp., U.S.A.