2024 Z900RS ABS

PARTS DIAGRAM

Seat Cover

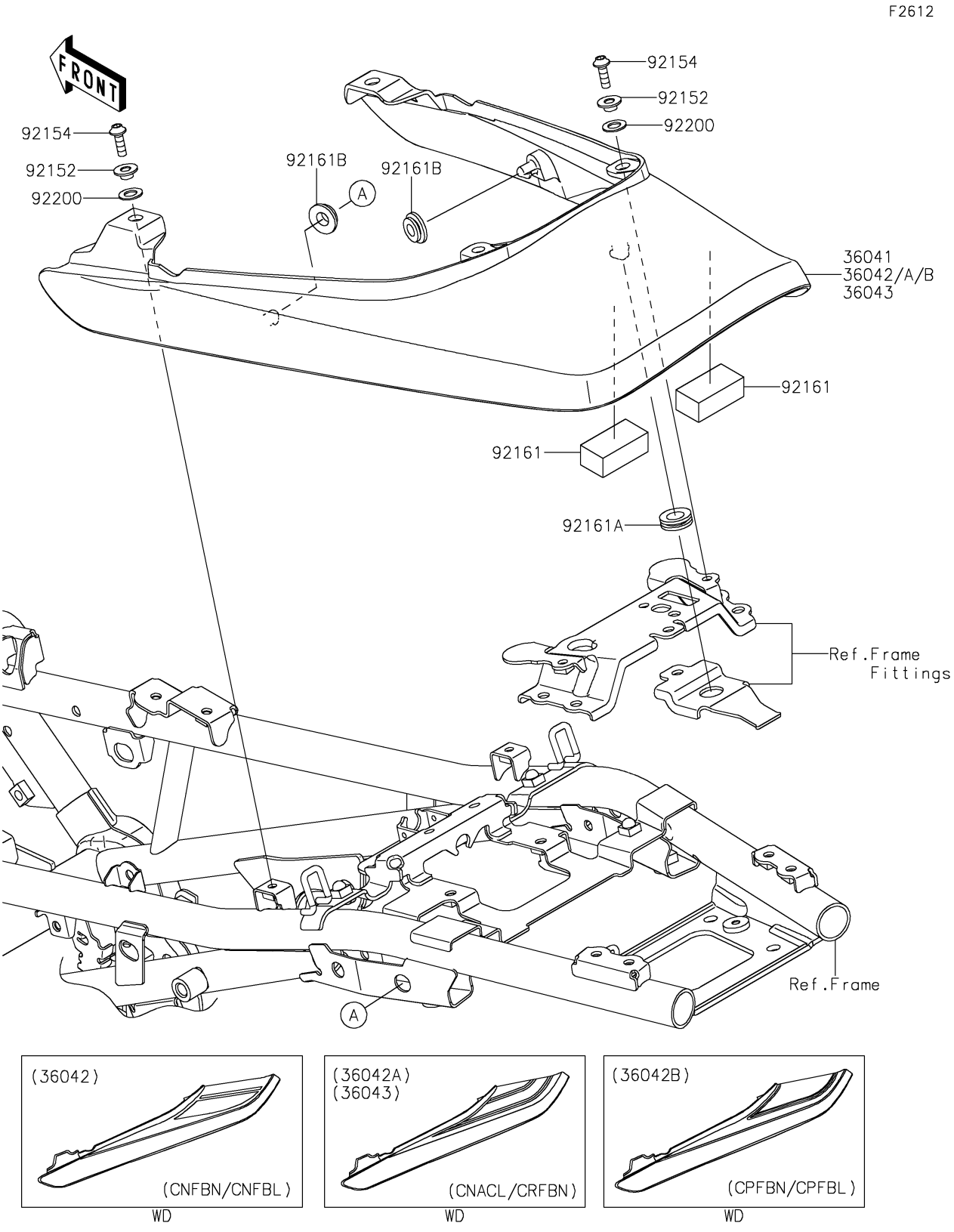

© 2026 Kawasaki Motors Corp., U.S.A.

2024 Z900RS ABS

PARTS LIST

Seat Cover

ITEM NAME	PART NUMBER	QUANTITY
COVER-TAIL,M.D.BLACK (Ref # 36043)	36043-5055-17K	1
COLLAR,5.6X8X5.45 (Ref # 92152)	92152-2537	4
BOLT,SOCKET,5X16 (Ref # 92154)	92154-1701	4
DAMPER,20X40X15 (Ref # 92161)	92161-1608	2
DAMPER,10X20X6 (Ref # 92161A)	92161-2168	1
DAMPER (Ref # 92161B)	92161-2450	2
WASHER,8.2X15X1 (Ref # 92200)	92200-0742	4

© 2026 Kawasaki Motors Corp., U.S.A.